SECTION EM
ENGINE MECHANICAL

CONTENTS

VQ35DE

PRECAUTION 3

PRECAUTIONS 3
Precautions for Removing Battery Terminal 3
Precaution for Procedure without Cowl Top Cover..... 3
Precaution for Supplemental Restraint System (SRS) "AIR BAG" and "SEAT BELT PRE-TENSIONER" 3
Special Cautions to Ensure the Safe Disposal of Sodium-filled Exhaust Valves 4
Precautions For Engine Service 5
Precaution for Angle Tightening 6
Precaution for Liquid Gasket 6

PREPARATION 8

PREPARATION 8
Special Service Tool 8
Commercial Service Tool 9

SYMPTOM DIAGNOSIS 12

NOISE, VIBRATION AND HARSHNESS (NVH) TROUBLESHOOTING 12
NVH Troubleshooting - Engine Noise 12
Use the Chart Below to Help You Find the Cause of the Symptom 13

PERIODIC MAINTENANCE 14

DRIVE BELT 14
Exploded View 14
Removal and Installation 14
Checking 15
Tension Adjustment 15

AIR CLEANER FILTER 16
Removal and Installation 16
Inspection (Viscous Paper Type) 16

SPARK PLUG 17
Exploded View 17
Removal and Installation 17
Inspection 18

CAMSHAFT VALVE CLEARANCE 19
Inspection and Adjustment 19

COMPRESSION PRESSURE 24
Inspection 24

REMOVAL AND INSTALLATION 25

ENGINE COVER 25
Exploded View 25
Removal and Installation 25

DRIVE BELT AUTO-TENSIONER 26
Exploded View 26
Removal and Installation 26

AIR CLEANER AND AIR DUCT 27
Exploded View 27
Removal and Installation 27
Inspection 28

INTAKE MANIFOLD COLLECTOR 29
Exploded View 29
Removal and Installation 30

INTAKE MANIFOLD 32
Exploded View 32
Removal and Installation 32
Inspection 33

EXHAUST MANIFOLD AND THREE WAY CATALYST 34
Exploded View 34
Removal and Installation 34
Inspection 38

OIL PAN AND OIL STRAINER 39
Exploded View 39

cardiagn.com

Removal and Installation 39
Inspection 44

OIL SEAL 45

VALVE OIL SEAL 45
VALVE OIL SEAL : Removal and Installation 45

FRONT OIL SEAL 46
FRONT OIL SEAL : Removal and Installation 46

REAR OIL SEAL 47
REAR OIL SEAL : Removal and Installation 47

FUEL INJECTOR AND FUEL TUBE 49
Exploded View 49
Removal and Installation 49
Inspection 53

IGNITION COIL, SPARK PLUG AND ROCKER COVER 54
Exploded View 54
Removal and Installation 54

UNIT REMOVAL AND INSTALLATION 57

ENGINE ASSEMBLY 57
Exploded View 57
Removal and Installation 58
Inspection 64

UNIT DISASSEMBLY AND ASSEMBLY ... 65

ENGINE STAND SETTING 65
Setting 65

ENGINE UNIT 67
Disassembly 67
Assembly 67

TIMING CHAIN 68
Exploded View 68
Removal and Installation 69
Inspection 85

CAMSHAFT 87
Exploded View 87
Removal and Installation 88
Inspection 91

CYLINDER HEAD 96
Exploded View 96
Removal and Installation 97
Disassembly and Assembly 100
Inspection 104

CYLINDER BLOCK 108
Exploded View 108
Disassembly and Assembly 109
Inspection 117

HOW TO SELECT PISTON AND BEARING .. 127
Description 127
Piston 127
Connecting Rod Bearing 128
Main Bearing 129

SERVICE DATA AND SPECIFICATIONS (SDS) 132

SERVICE DATA AND SPECIFICATIONS (SDS) 132
General Specification 132
Drive Belt 133
Spark Plug 133
Intake Manifold 134
Exhaust Manifold 134
Camshaft 134
Cylinder Head 136
Cylinder Block 138
Main Bearing 141
Connecting Rod Bearing 142

cardiagn.com

PRECAUTION

PRECAUTIONS

Precautions for Removing Battery Terminal

INFOID:0000000013057832

When disconnecting the battery terminal, pay attention to the following.
- Always use a 12V battery as power source.
- Never disconnect battery terminal while engine is running.
- When removing the 12V battery terminal, turn OFF the ignition switch and wait at least 30 seconds.
- For vehicles with the engine listed below, remove the battery terminal after a lapse of the specified time:

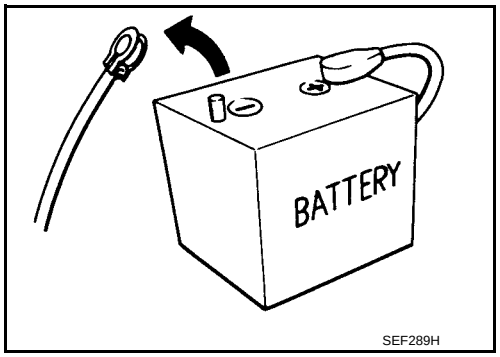

D4D engine	: 20 minutes	YS23DDT	: 4 minutes
HRA2DDT	: 12 minutes	YS23DDTT	: 4 minutes
K9K engine	: 4 minutes	ZD30DDTi	: 60 seconds
M9R engine	: 4 minutes	ZD30DDTT	: 60 seconds
R9M engine	: 4 minutes		
V9X engine	: 4 minutes		
YD25DDTi	: 2 minutes		

NOTE:
ECU may be active for several tens of seconds after the ignition switch is turned OFF. If the battery terminal is removed before ECU stops, then a DTC detection error or ECU data corruption may occur.
- After high-load driving, if the vehicle is equipped with the V9X engine, turn the ignition switch OFF and wait for at least 15 minutes to remove the battery terminal.
  NOTE:
  - Turbocharger cooling pump may operate in a few minutes after the ignition switch is turned OFF.
  - Example of high-load driving
  - Driving for 30 minutes or more at 140 km/h (86 MPH) or more.
  - Driving for 30 minutes or more on a steep slope.
- For vehicles with the 2-batteries, be sure to connect the main battery and the sub battery before turning ON the ignition switch.
  NOTE:
  If the ignition switch is turned ON with any one of the terminals of main battery and sub battery disconnected, then DTC may be detected.
- After installing the 12V battery, always check "Self Diagnosis Result" of all ECUs and erase DTC.
  NOTE:
  The removal of 12V battery may cause a DTC detection error.

Precaution for Procedure without Cowl Top Cover

INFOID:0000000012409838

When performing the procedure after removing cowl top cover, cover the lower end of windshield with urethane, etc to prevent damage to windshield.

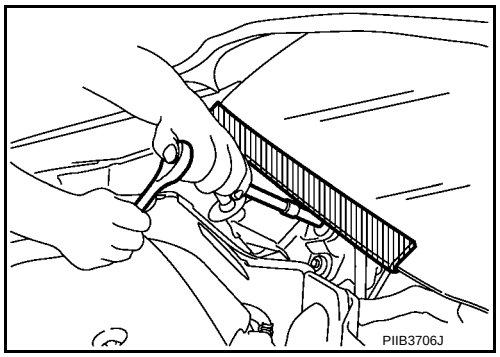

Precaution for Supplemental Restraint System (SRS) "AIR BAG" and "SEAT BELT PRE-TENSIONER"

INFOID:0000000012409839

The Supplemental Restraint System such as “AIR BAG” and “SEAT BELT PRE-TENSIONER”, used along with a front seat belt, helps to reduce the risk or severity of injury to the driver and front passenger for certain

cardiagn.com

types of collision. This system includes seat belt switch inputs and dual stage front air bag modules. The SRS system uses the seat belt switches to determine the front air bag deployment, and may only deploy one front air bag, depending on the severity of a collision and whether the front occupants are belted or unbelted.
Information necessary to service the system safely is included in the “SRS AIR BAG” and “SEAT BELT” of this Service Manual.

WARNING:

Always observe the following items for preventing accidental activation.

- **To avoid rendering the SRS inoperative, which could increase the risk of personal injury or death in the event of a collision that would result in air bag inflation, all maintenance must be performed by an authorized NISSAN/INFINITI dealer.**
- **Improper maintenance, including incorrect removal and installation of the SRS, can lead to personal injury caused by unintentional activation of the system. For removal of Spiral Cable and Air Bag Module, see “SRS AIR BAG”.**
- **Never use electrical test equipment on any circuit related to the SRS unless instructed to in this Service Manual. SRS wiring harnesses can be identified by yellow and/or orange harnesses or harness connectors.**

PRECAUTIONS WHEN USING POWER TOOLS (AIR OR ELECTRIC) AND HAMMERS

WARNING:

Always observe the following items for preventing accidental activation.

- **When working near the Air Bag Diagnosis Sensor Unit or other Air Bag System sensors with the ignition ON or engine running, never use air or electric power tools or strike near the sensor(s) with a hammer. Heavy vibration could activate the sensor(s) and deploy the air bag(s), possibly causing serious injury.**
- **When using air or electric power tools or hammers, always switch the ignition OFF, disconnect the battery, and wait at least 3 minutes before performing any service.**

Special Cautions to Ensure the Safe Disposal of Sodium-filled Exhaust Valves

INFOID:0000000012409840

Handling and disposal of sodium-filled exhaust valves requires special care and consideration. Under conditions such as breakage with subsequent contact with water, metal sodium which lines the inner portion of exhaust valve will react violently, forming sodium hydroxide and hydrogen which may result in an explosion. Sodium-filled exhaust valve is identified on the top of its stem as shown in illustration.

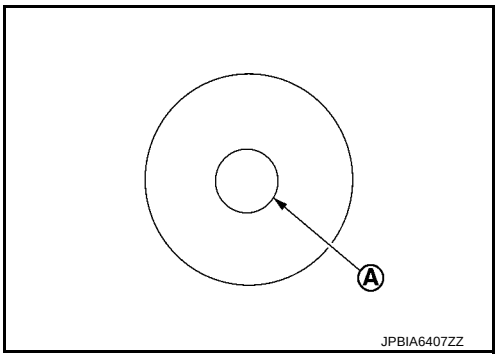

Identification mark of sodium-filled exhaust valve A : E

DEALER DISPOSAL INSTRUCTIONS

CAUTION:

- **Use approved shatter-resistant eye protection when performing this procedure.**
- **Perform this and all subsequent disposal work procedures in an open room, away from flammable liquids. Keep a fire extinguisher, rated at least 10 ABC, in close proximity to the work area.**
- **Be sure to wear rubber gloves when performing the following operations.**
- **Make sure the resultant (high alkalinity) waste water does not contact your skin. If the waste water does contact you, wash the contacted area immediately with large quantities of water.**
- **Dealers should check their respective state and local regulations concerning any chemical treatment or waste water discharge permits which may be required to dispose of the resultant (high alkalinity) waste water.**

cardiagn.com

1. Clamp valve stem in a vice.
2. The valve has a specially-hardened surface. To cut through it, first remove a half-round section, approximately 30 mm (1.18 in) long using air-powered grinder until black color is removed and silver color appears.

   A : Black color
   B : Silver color
   c : 47 mm (1.85 in)
   d : 17 mm (0.67 in)

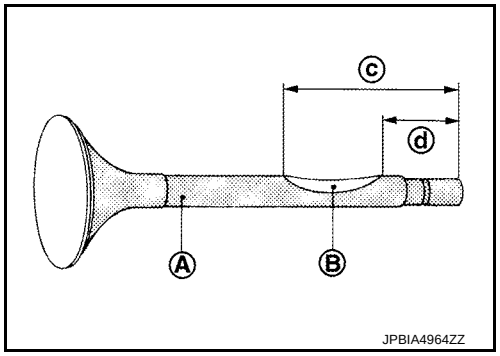

3. Use hacksaw to cut through approximately half the diameter of valve stem. Make the serration at a point 40 mm (1.57 in) from the end of valve stem.

   a : 32 mm (1.26 in)

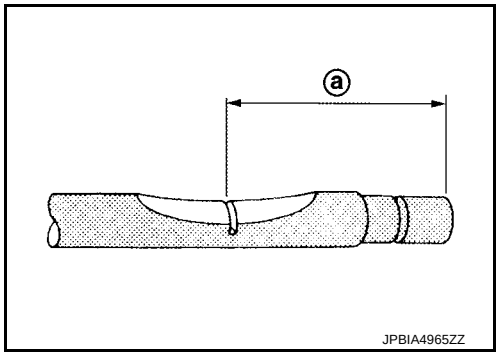

4. Cover the serrated end of the valve with a large shop towel (A). Strike the valve face end with a hammer, separating it into two pieces.

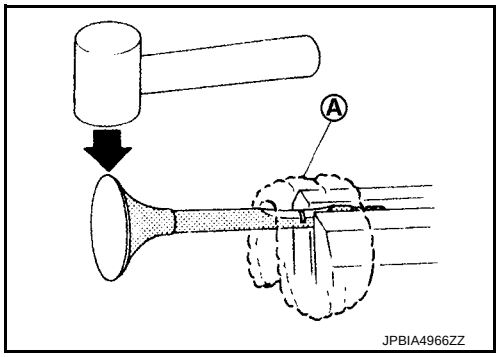

5. Fill a bucket (A) (such as a 20 ℓ oil can) with at least 10 ℓ (2-1/4 Imp gal) of water. Carefully place the alreadycut (serrated) valves into the water one-at-a-time using a set of large tweezers and quickly move away at least 2.7 m (9 ft).
6. The valves should be placed in a standing position as shown in the illustration to allow complete reaction. After the bubbling action has subsided, additional valves can be placed into the bucket allowing each subsequent chemical reaction to subside. However, no more than 8 valves should be placed in the same 10 ℓ (2-1/4 Imp gal) amount of water. The complete chemical reaction may take as long as 4 to 5 hours. Remove the valves using a set of large tweezers after the chemical reaction has stopped. Afterwards, valves can be disposed as ordinary scrap.

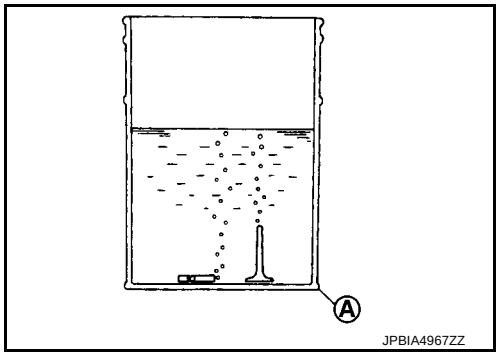

Precautions For Engine Service

INFOID:0000000012409841

DISCONNECTING FUEL PIPING

- Before starting work, check no fire or spark producing items are in the work area.
- Release fuel pressure before disconnecting and disassembly.
- After disconnecting pipes, plug openings to stop fuel leakage.

DRAINING ENGINE COOLANT

Drain engine coolant and engine oil when the engine is cooled.

cardiagn.com

INSPECTION, REPAIR AND REPLACEMENT

Before repairing or replacing, thoroughly inspect parts. Inspect new replacement parts in the same way, and replace if necessary.

REMOVAL AND DISASSEMBLY

- When instructed to use SST, use specified tools. Always be careful to work safely, avoid forceful or uninstructed operations.
- Exercise maximum care to avoid damage to mating or sliding surfaces.
- Dowel pins are used for several parts alignment. When replacing and reassembling parts with dowel pins, check that dowel pins are installed in the original position.
- Must cover openings of engine system with a tape or equivalent, to seal out foreign materials.
- Mark and arrange disassembly parts in an organized way for easy troubleshooting and reassembly.
- When loosening nuts and bolts, as a basic rule, start with the one furthest outside, then the one diagonally opposite, and so on. If the order of loosening is specified, do exactly as specified. Power tools may be used in the step.

ASSEMBLY AND INSTALLATION

- Use torque wrench to tighten bolts or nuts to specification.
- When tightening nuts and bolts, as a basic rule, equally tighten in several different steps starting with the ones in center, then ones on inside and outside diagonally in this order. If the order of tightening is specified, do exactly as specified.
- Replace with new gasket, packing, oil seal or O-ring.
- Thoroughly wash, clean, and air-blow each part. Carefully check engine oil or engine coolant passages for any restriction and blockage.
- Avoid damaging sliding or mating surfaces. Completely remove foreign materials such as cloth lint or dust. Before assembly, oil sliding surfaces well.
- After disassembling, or exposing any internal engine parts, change engine oil and replace oil filter with a new one.
- Release air within route when refilling after draining engine coolant.
- After repairing, start the engine and increase engine speed to check engine coolant, fuel, engine oil, and exhaust gases for leakage.

Precaution for Angle Tightening

INFOID:0000000012409842

- Use the angle wrench [SST: KV10112100 (BT8653-A)] for the final tightening of the following engine parts:
- Cylinder head bolts
- Main bearing cap bolts
- Connecting rod cap bolts
- Crankshaft pulley bolt (No the angle wrench is required as bolt flange is provided with notches for angle tightening)
- Never use a torque value for final tightening.
- The torque value for these parts are for a preliminary step.
- Ensure thread and seat surfaces are clean and coated with engine oil.

Precaution for Liquid Gasket

INFOID:0000000012409843

REMOVAL OF LIQUID GASKET SEALING

- After removing mounting nuts and bolts, separate the mating surface using the seal cutter [SST: KV10111100 (J-37228)] (A) and remove old liquid gasket sealing.
  CAUTION:
  Be careful not to damage the mating surfaces.
- Tap (B) the seal cutter [SST: KV10111100 (J-37228)] to insert it, and then slide (C) it by tapping on the side as shown in the figure.
- In areas where the seal cutter [SST: KV10111100 (J-37228)] is difficult to use, use a plastic hammer to lightly tap the parts, to remove it.
  CAUTION:

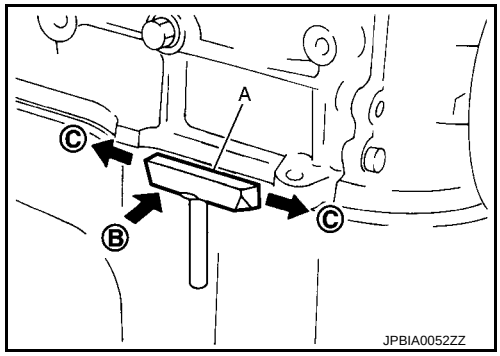

cardiagn.com

If for some unavoidable reason tool such as a screwdriver is used, be careful not to damage the mating surfaces.

LIQUID GASKET APPLICATION PROCEDURE

1. Using a scraper (A), remove old liquid gasket adhering to the gasket application surface and the mating surface.
   - Remove liquid gasket completely from the groove of the gasket application surface, mounting bolts, and bolt holes.
2. Wipe the liquid gasket application surface and the mating surface with white gasoline (lighting and heating use) to remove adhering moisture, grease and foreign materials.

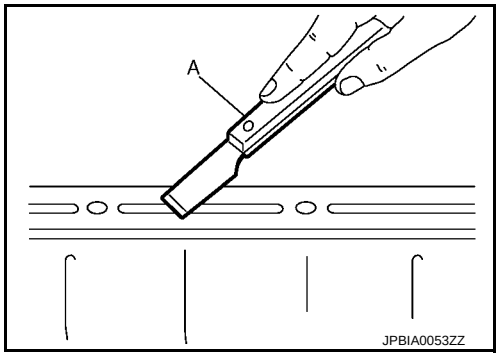

3. Attach liquid gasket tube to the tube presser (commercial service tool).
   Use Genuine RTV Silicone Sealant or equivalent. Refer to GI-22, "Recommended Chemical Products and Sealants".
4. Apply liquid gasket without breaks to the specified location with the specified dimensions.
   - If there is a groove for liquid gasket application, apply liquid gasket to the groove.

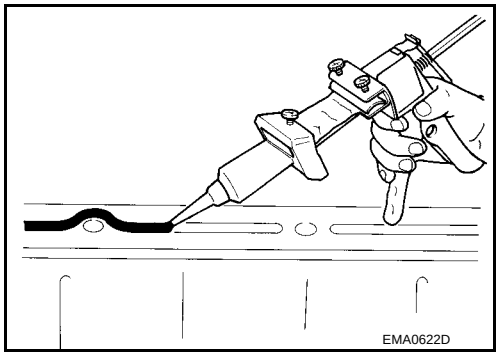

- As for bolt holes, normally apply liquid gasket inside the holes. Occasionally, it should be applied outside the holes. Check to read the text of this manual.
- Within 5 minutes of liquid gasket application, install the mating component.
- If liquid gasket protrudes, wipe it off immediately.
- Never retighten mounting bolts or nuts after the installation.
- After 30 minutes or more have passed from the installation, fill engine oil and engine coolant.

CAUTION:
If there are specific instructions in this manual, observe them.

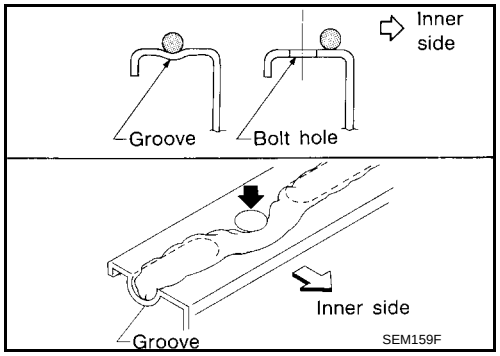

cardiagn.com

PREPARATION

PREPARATION

Special Service Tool

INFOID:0000000012409844

The actual shapes of TechMate tools may differ from those of special service tools illustrated here.

Tool number (TechMate No.) Tool name		Description
KV10116200 (J-26336-A) Valve spring compressor 1. KV10115900 (J-26336-20) Attachment 2. KV10109220 (—) Adapter	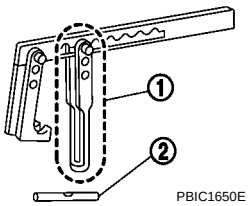 PBIC1650E	Disassembling valve mechanism Part (1) is a component of KV10116200 (J-26336-A), but Part (2) is not so.
KV10107902 (J-38959) Valve oil seal puller	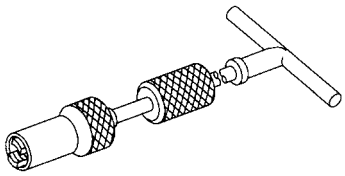 NT011	Replacing valve oil seal
KV10115600 (J-38958) Valve oil seal drift	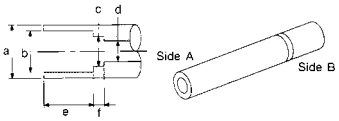 S-NT603	Installing valve oil seal **Use side A.** **a: 20 mm (0.79 in) dia.** **b: 13 mm (0.51 in) dia.** **c: 10.3 mm (0.406 in) dia.** **d: 8 mm (0.31 in) dia.** **e: 10.7 mm (0.421 in)** **f: 5 mm (0.20 in)**
EM03470000 (J-8037) Piston ring compressor	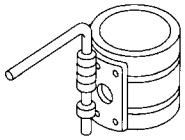 NT044	Installing piston assembly into cylinder bore
ST16610001 (J-23907) Pilot bushing puller	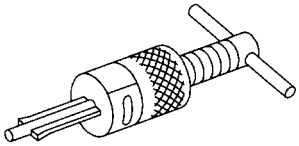 NT045	Removing pilot converter
KV10111100 (J-37228) Seal cutter	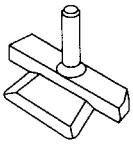 NT046	Removing oil pan (lower and upper), front and rear timing chain case, etc.

cardiagn.com

Tool number (TechMate No.) Tool name	Description
KV10112100 (BT8653-A) Angle wrench 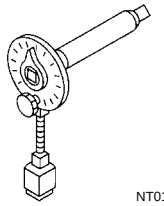 NT014	Tightening bolts for connecting rod bearing cap, cylinder head, etc. in angle
KV10117100 (J-3647-A) Heated oxygen sensor wrench 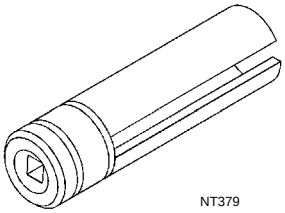 NT379	Loosening or tightening air fuel ratio sensor 1 **For 22 mm (0.87 in) width hexagon nut**
KV10114400 (J-38365) Heated oxygen sensor wrench 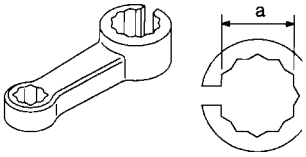 NT636	Loosening or tightening heated oxygen sensor 2 **a: 22 mm (0.87 in)**

Commercial Service Tool

INFOID:0000000012409845

(TechMate No.) Tool name	Description
(J-45488) Quick connector release 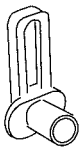 PBIC0198E	Removing fuel tube quick connectors in engine room
(—) Power tool 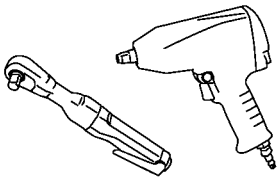 PBIC0190E	Loosening bolts and nuts
(—) Tube presser 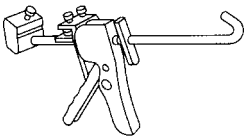 NT052	Pressing the tube of liquid gasket

cardiagn.com

(TechMate No.) Tool name	Description
(—) Manual lift table caddy 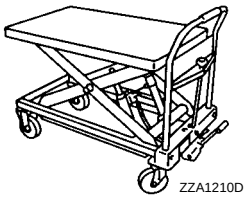 ZZA1210D	Removing and installing engine
(J-24239-01) Cylinder head bolt wrench 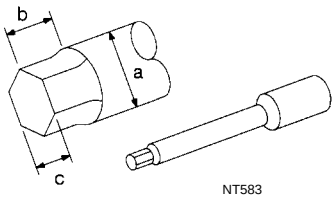 NT583	Loosening and tightening cylinder head bolt, and used with the angle wrench [SST: KV10112100 (BT8653-A)] **a: 13 mm (0.51 in) dia.** **b: 12 mm (0.47 in)** **c: 10 mm (0.39 in)**
(—) 1. Compression tester 2. Adapter 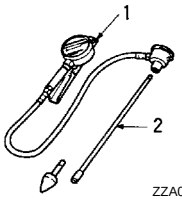 ZZA0008D	Checking compression pressure
(—) Spark plug wrench 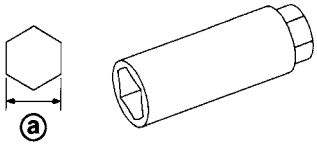 JPBIA0399ZZ	Removing and installing spark plug **a: 14 mm (0.55 in)**
(—) Pulley holder ZZA1010D	Removing and installing crankshaft pulley
(—) Valve seat cutter set 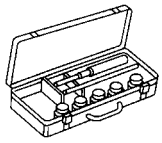 NT048	Finishing valve seat dimensions
(—) Piston ring expander 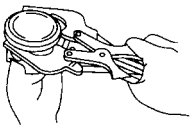 NT030	Removing and installing piston ring

cardiagn.com

(TechMate No.) Tool name		Description
(—) Valve guide drift	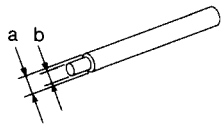 NT015	Removing and installing valve guide **Intake and Exhaust:** **a: 9.5 mm (0.374 in) dia.** **b: 5.5 mm (0.217 in) dia.**
(—) Valve guide reamer	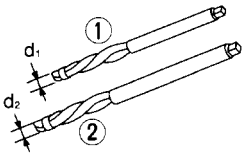 NT016	(1): Reaming valve guide inner hole (2): Reaming hole for oversize valve guide **Intake and Exhaust:** **d_1: 6.0 mm (0.236 in) dia.** **d_2: 10.2 mm (0.402 in) dia.**
a: (J-43897-18) b: (J-43897-12) Oxygen sensor thread cleaner	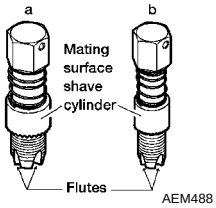 AEM488	Reconditioning the exhaust system threads before installing a new air fuel ratio sensor and heated oxygen sensor (Use with anti-seize lubricant shown below.) **a: J-43897-18 [18 mm (0.71 in) dia.] for zirconia heated oxygen sensor and air fuel ratio sensor** **b: J-43897-12 [12 mm (0.47 in) dia.] for titania heated oxygen sensor**
(—) Anti-seize lubricant (Permatex 133AR or equivalent meeting MIL specification MIL-A-907)	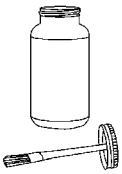 AEM489	Lubricating air fuel ratio sensor and oxygen sensor threads cleaning tool when reconditioning exhaust system threads

cardiagn.com

SYMPTOM DIAGNOSIS

NOISE, VIBRATION AND HARSHNESS (NVH) TROUBLESHOOTING

NVH Troubleshooting - Engine Noise

INFOID:0000000012409846

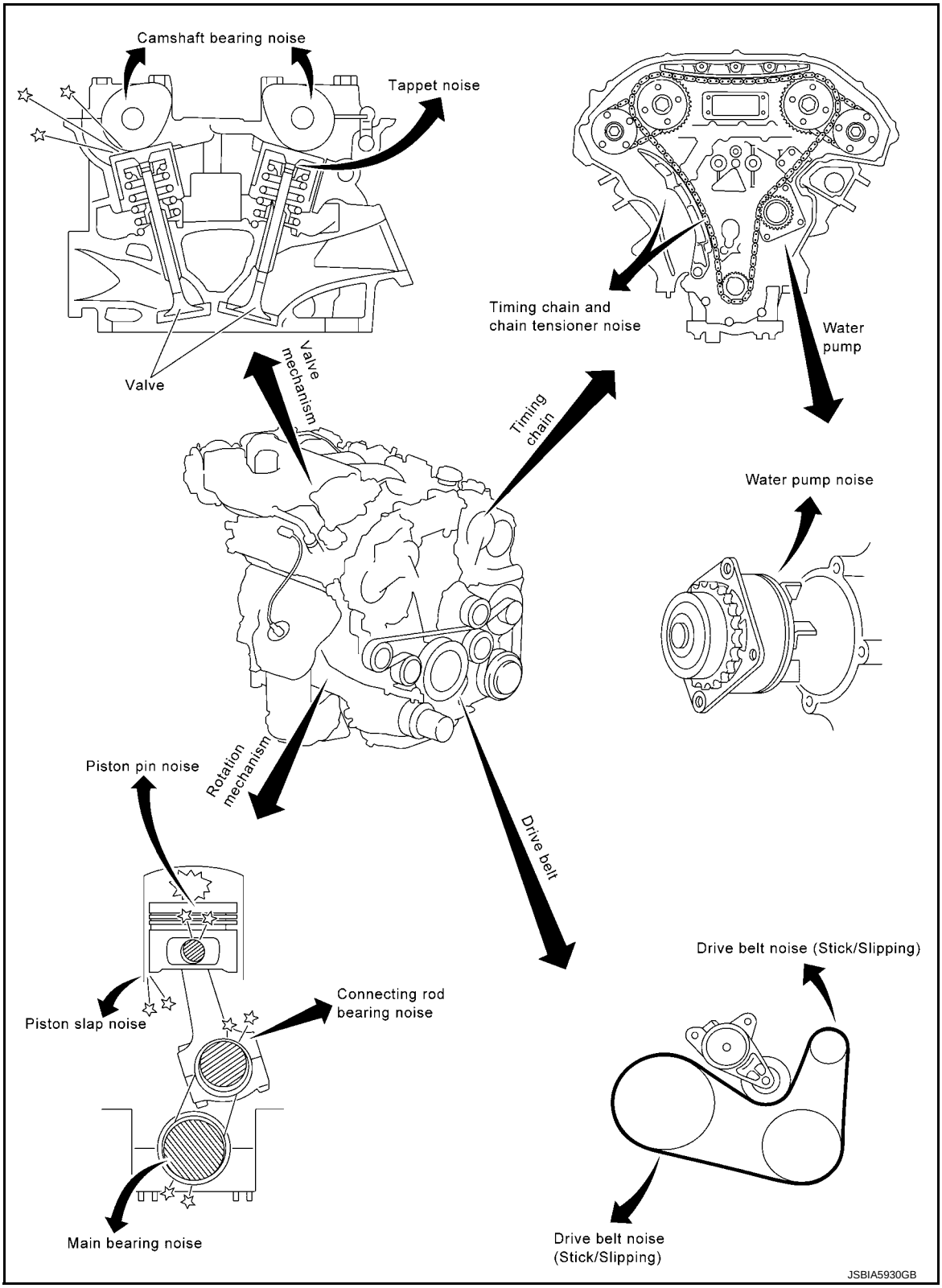

cardiagn.com

Use the Chart Below to Help You Find the Cause of the Symptom

INFOID:0000000012409847

1. Locate the area where noise occurs.
2. Confirm the type of noise.
3. Specify the operating condition of the engine.
4. Check specified noise source.
   If necessary, repair or replace these parts.

Location of noise	Type of noise	Operating condition of engine						Source of noise	Check item	Reference page
		Before warm-up	After warm-up	When starting	When idling	When racing	While driving			
Top of engine Rocker cover Cylinder head	Ticking or clicking	C	A	—	A	B	—	Tappet noise	Valve clearance	EM-19
	Rattle	C	A	—	A	B	C	Camshaft bearing noise	Camshaft runout Camshaft journal oil clearance	EM-134
Crankshaft pulley Cylinder block (Side of engine) Oil pan	Slap or knock	—	A	—	B	B	—	Piston pin noise	Piston to piston pin oil clearance Connecting rod bushing oil clearance	EM-138
	Slap or rap	A	—	—	B	B	A	Piston slap noise	Piston to cylinder bore clearance Piston ring side clearance Piston ring end gap Connecting rod bend and torsion	EM-138
	Knock	A	B	C	B	B	B	Connecting rod bearing noise	Connecting rod bushing oil clearance Connecting rod bearing oil clearance	EM-138 EM-142
	Knock	A	B	—	A	B	C	Main bearing noise	Main bearing oil clearance Crankshaft runout	EM-141 EM-138
Front of engine Timing chain case	Tapping or ticking	A	A	—	B	B	B	Timing chain and timing chain tensioner noise	Timing chain cracks and wear Timing chain tensioner operation	EM-85 EM-69
Front of engine	Squeaking or fizzing	A	B	—	B	—	C	Drive belt (Sticking or slipping)	Drive belt deflection	EM-69
	Squall Creak	A	B	—	B	A	B	Water pump noise	Water pump operation	CO-20

A: Closely related B: Related C: Sometimes related —: Not related

cardiagn.com

PERIODIC MAINTENANCE

DRIVE BELT

Exploded View

INFOID:0000000012409848

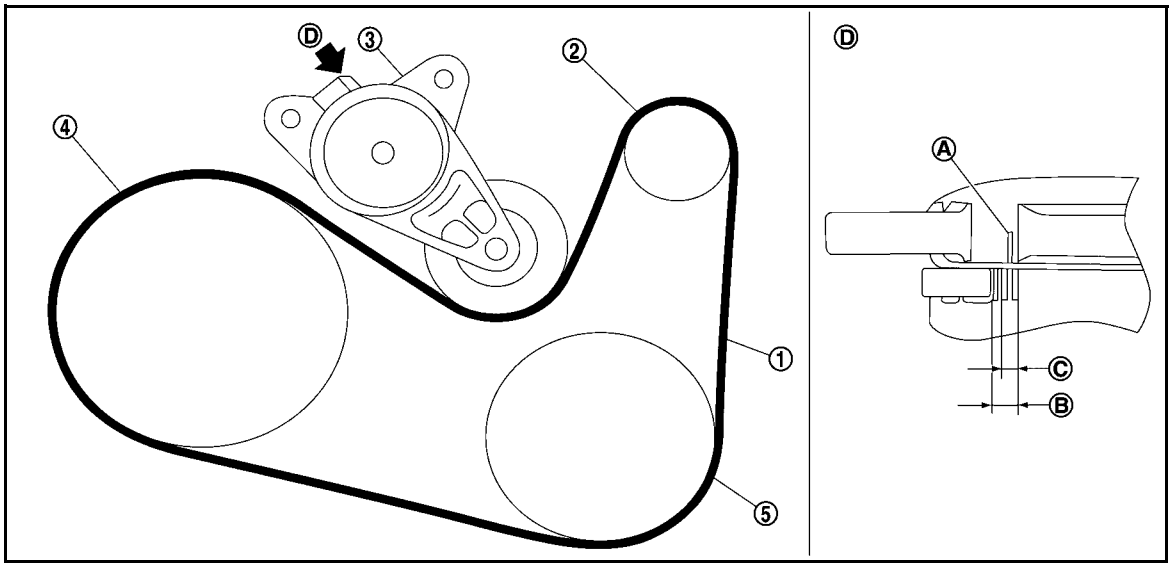

1.	Drive belt	2.	Alternator	3.	Drive belt auto-tensioner
4.	Crankshaft pulley	5.	A/C compressor		
A.	Indicator	B.	Possible use range	C.	Range when new drive belt is installed
D.	View D				
⇦	: Engine front				

Removal and Installation

INFOID:0000000012409849

REMOVAL

1. Remove front wheel and tire (RH).
2. Remove splash guard (RH). Refer to EXT-23, "Exploded View".
3. While securely holding the square part (A) in pulley center of drive belt auto-tensioner (1), move in the direction of arrow (loosening direction of drive belt auto–tensioner) using suitable tool.
   CAUTION:
   - **Avoid placing hand in a location where pinching may occur if the holding tool accidentally comes off.**
4. Insert a rod approximately 6 mm (0.24 in) in diameter such as short-length screwdriver into the hole (B) of the retaining boss to fix drive belt auto-tensioner pulley.
5. Loosen drive belt in sequence, and remove it.

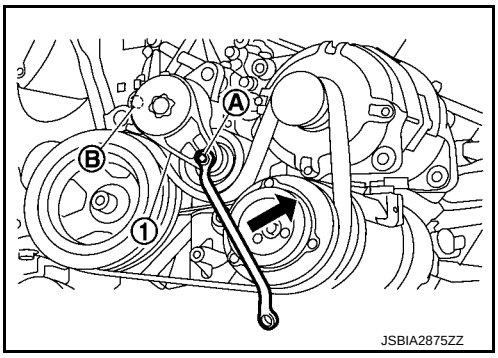

INSTALLATION

cardiagn.com

1. While securely holding the square part (A) in pulley center of drive belt auto-tensioner (1), move in the direction of arrow (loosening direction of drive belt auto–tensioner) using suitable tool.
   CAUTION:
   - **Avoid placing hand in a location where pinching may occur if the holding tool accidentally comes off.**

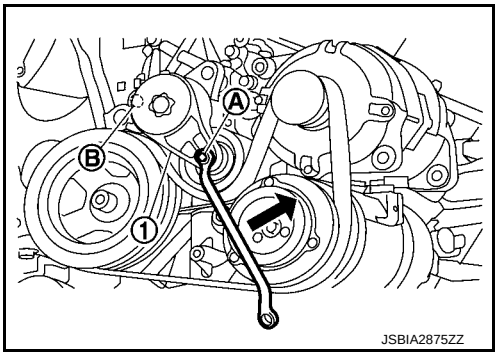

2. Insert a rod approximately 6 mm (0.24 in) in diameter such as short-length screwdriver into the hole (A) of retaining boss to fix drive belt auto-tensioner pulley.
3. Hook drive belt onto all pulleys except for drive belt auto-tensioner pulley, and then onto drive belt auto-tensioner pulley finally.
   CAUTION:
   - **Confirm drive belt is completely set to pulleys.**
   - **Check for engine oil, working fluid and engine coolant are not adhered to drive belt and each pulley groove.**
4. Release drive belt auto-tensioner, and apply tension to drive belt.
5. Turn crankshaft pulley clockwise several times to equalize tension between each pulley.
6. Confirm tension of drive belt at indicator is within the possible use range. Refer to EM-14, "Exploded View".

Checking

INFOID:0000000012409850

WARNING:
Be sure to perform the this step when engine is stopped.
- Check that the indicator (A) of drive belt auto-tensioner is within the possible use range (B).
  NOTE:
  - Check the drive belt auto-tensioner indication when the engine is cold.
  - When new drive belt is installed, the indicator should be within the range (C) in the figure.
- Visually check entire drive belt for wear, damage or cracks.
- If the indicator is out of the possible use range or belt is damaged, replace drive belt.

Tension Adjustment

INFOID:0000000012409851

Refer to EM-133, "Drive Belt".

cardiagn.com

AIR CLEANER FILTER

Removal and Installation

INFOID:0000000012409852

REMOVAL

1. Unhook air cleaner case (lower) side clips and lift up air cleaner case (upper).
2. Remove air cleaner filter and holder assembly from air cleaner case (lower).

INSTALLATION

Note the following, and install in the reverse order of removal.

- Insert pawls (B) of air cleaner case (upper) (1) into 3 notches (A) of air cleaner case (lower) (2) and fix with clips.

⇦ :Vehicle front

- Check that the air cleaner case (upper) is securely installed with no backlash.

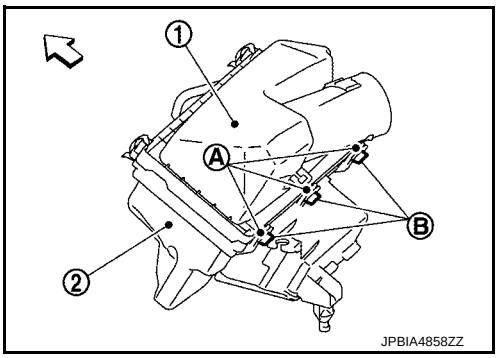

Inspection (Viscous Paper Type)

INFOID:0000000012409853

INSPECTION AFTER REMOVAL

Examine with eyes that there is no stain, clogging, or damage on air cleaner element.

- Remove dusts (such as dead leafs) on air cleaner element surface and inside cleaner case.
- If clogging or damage is observed, replace the air cleaner element.

CAUTION:

Never clean the viscous paper type air cleaner element by blowing as there is a risk of deterioration of its performance

MAINTENANCE INTERVAL

Refer to MA-6, "Introduction of Periodic Maintenance".

cardiagn.com

SPARK PLUG

Exploded View

INFOID:0000000012409854

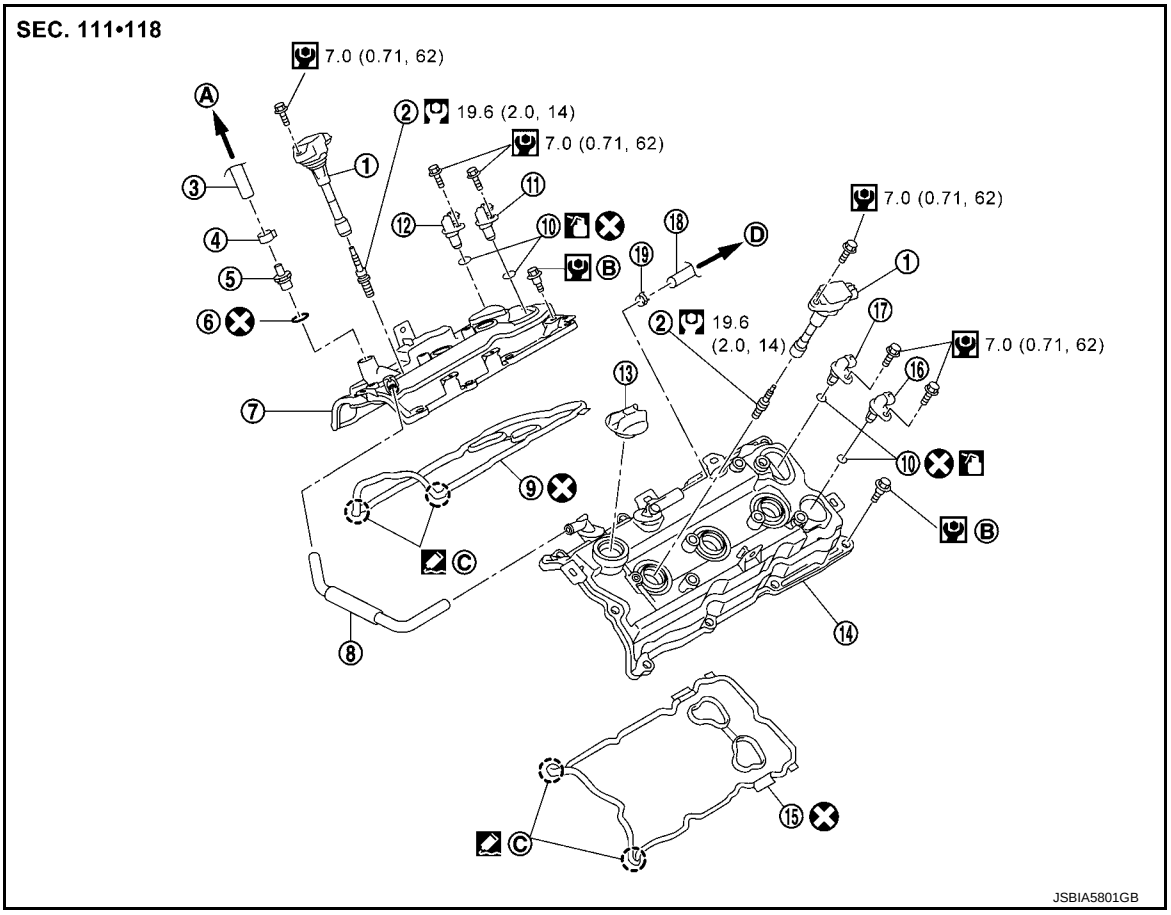

1.	Ignition coil	2.	Spark plug	3.	PCV hose
4.	Clamp	5.	PCV valve	6.	O-ring
7.	Rocker cover (bank 1)	8.	PCV hose	9.	Rocker cover gasket (bank 1)
10.	O-ring	11.	Camshaft position sensor (PHASE) (bank 1)	12.	Exhaust valve timing control position sensor (bank 1)
13.	Oil filler cap	14.	Rocker cover (bank 2)	15.	Rocker cover gasket (bank 2)
16.	Exhaust valve timing control position sensor (bank 2)	17.	Camshaft position sensor (PHASE) (bank 2)	18.	PCV hose
19	Clamp				
A.	To intake manifold collector	B.	Comply with the assembly procedure when tightening. Refer to EM-54	C.	Camshaft bracket side
D.	To air duct assembly				

: Always replace after every disassembly.

: N·m (kg-m, ft-lb)

: N·m (kg-m, in-lb)

: Should be lubricated with oil.

: Sealing point

Removal and Installation

INFOID:0000000012409855

REMOVAL

cardiagn.com

1. Remove engine cover. Refer to EM-25, "Exploded View".
2. Remove air cleaner cases (upper and lower) and air duct assembly. Refer to EM-27, "Exploded View".
3. Remove intake manifold collector. Refer to EM-29, "Exploded View".
4. Remove ignition coil. Refer to EM-54, "Exploded View".
5. Remove spark plug with a spark plug wrench (commercial service tool).

   a : 14 mm (0.55 in)

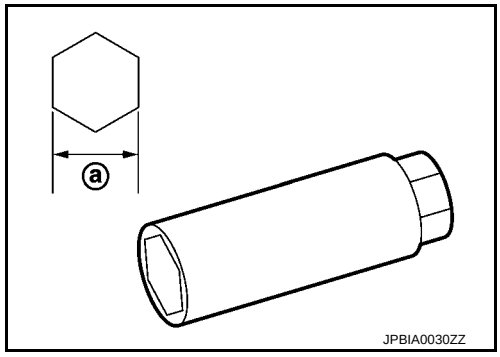

INSTALLATION

Install in the reverse order of removal.

Inspection

INFOID:0000000012409856

INSPECTION AFTER REMOVAL

Use the standard type spark plug for normal condition.

Spark plug (Standard type) : Refer to EM-133, "Spark Plug".

CAUTION:

- **Never drop or shock spark plug.**
- **Never use a wire brush for cleaning.**
- **If plug tip is covered with carbon, spark plug cleaner may be used.**

Cleaner air pressure:	**Less than 588 kPa (6 kg/cm^2, 85 psi)**
Cleaning time:	**Less than 20 seconds**

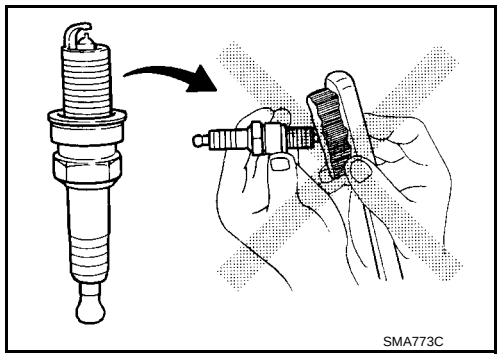

- **Spark plug gap adjustment is not required between replacement intervals.**
- **Measure spark plug gap. When it exceeds the limit, replace spark plug even if it is within the specified replacement mileage. Refer to EM-133, "Spark Plug".**

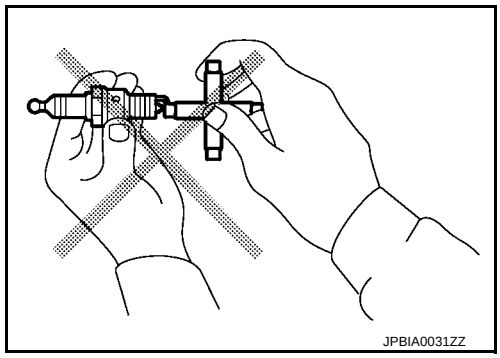

cardiagn.com

CAMSHAFT VALVE CLEARANCE

Inspection and Adjustment

INFOID:0000000012409857

INSPECTION

Perform inspection as follows after removal, installation or replacement of camshaft or valve-related parts, or if there is unusual engine conditions regarding valve clearance.

In cases of removing/installing or replacing camshaft and valve-related parts, or of unusual engine conditions due to changes in valve clearance (found malfunctions during stating, idling or causing noise), perform inspection as follows:

⇦ : Engine front

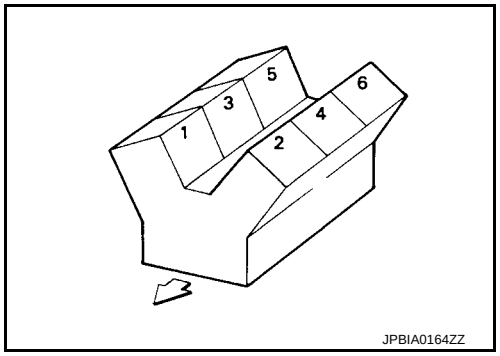

1. Remove rocker covers (bank 1 and bank 2). Refer to EM-54, "Exploded View".
2. Measure the valve clearance as follows:

a. Set No. 1 cylinder at TDC of its compression stroke.
   - Rotate crankshaft pulley clockwise to align timing mark (grooved line without color) (⬅) with timing indicator.

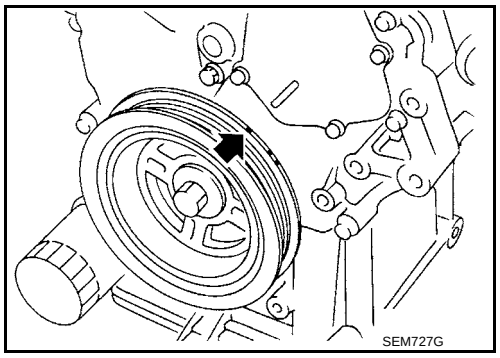

   - Check that intake and exhaust cam nose on No. 1 cylinder (engine front side of bank 1) are located as shown in the figure.
   - If not, turn crankshaft one revolution (360 degrees) and align as shown in the figure.

⇦ : Engine front

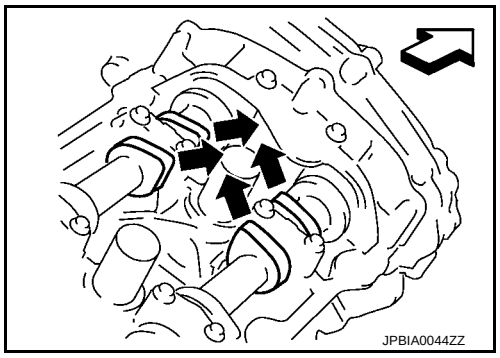

b. Use a feeler gauge, measure the clearance between valve lifter and camshaft.

Valve clearance : Refer to EM-134, "Camshaft".

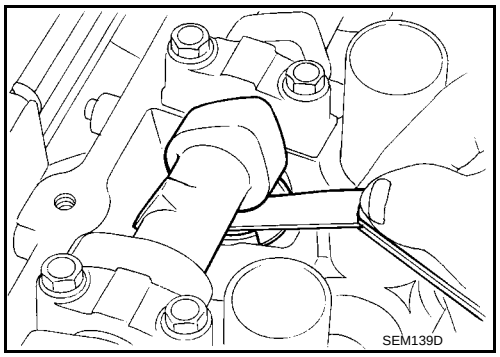

cardiagn.com

- By referring to the figure, measure the valve clearances at locations marked "×" as shown in the table below (locations indicated in the figure).

  ⇦ : Engine front

- No. 1 cylinder at compression TDC

Measuring position [bank 1 (A)]		No. 1 CYL.	No. 3 CYL.	No. 5 CYL.
No. 1 cylinder at compression TDC	EXH (C)		× (B)	
	INT (D)	× (E)		
Measuring position [bank 2 (H)]		No. 2 CYL.	No. 4 CYL.	No. 6 CYL.
No. 1 cylinder at compression TDC	INT (D)			× (F)
	EXH (C)	× (G)		

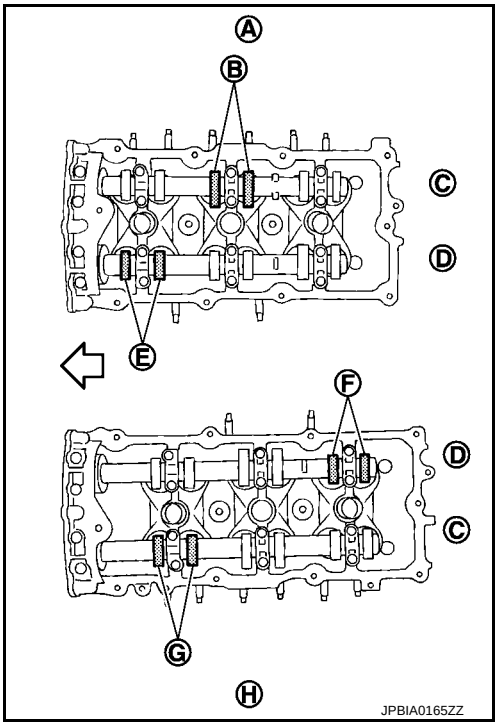

c. Rotate crankshaft by 240 degrees clockwise (when viewed from engine front) to align No. 3 cylinder at TDC its compression stroke.

NOTE:

Mark (A) a position 240 degrees from a corner of the hexagonal part of crankshaft pulley mounting bolt as shown in the figure. Use the hexagonal part as a guide.

1 : Crankshaft pulley

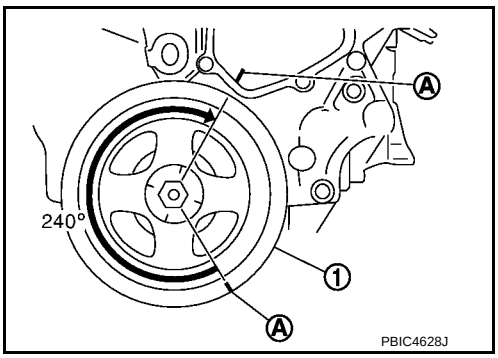

cardiagn.com

- By referring to the figure, measure the valve clearances at locations marked "×" as shown in the table below (locations indicated in the figure).

  ⇦ : Engine front

- No. 3 cylinder at compression TDC

Measuring position [bank 1 (A)]		No. 1 CYL.	No. 3 CYL.	No. 5 CYL.
No. 3 cylinder at compression TDC	EXH (C)			× (B)
	INT (D)		× (E)	
Measuring position [bank 2 (H)]		No. 2 CYL.	No. 4 CYL.	No. 6 CYL.
No. 3 cylinder at compression TDC	INT (D)	× (F)		
	EXH (C)		× (G)	

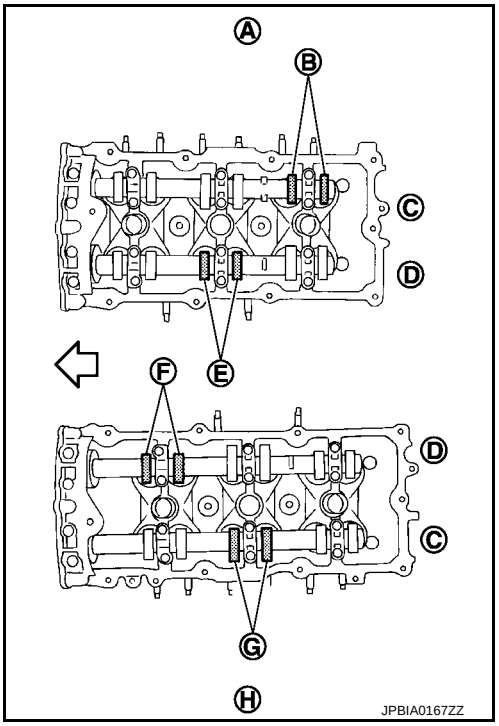

d. Rotate crankshaft by 240 degrees clockwise (when viewed from engine front) to align No. 5 cylinder at TDC of compression stroke.
NOTE:
Mark (A) a position 240 degrees from a corner of the hexagonal part of crankshaft pulley mounting bolt as shown in the figure. Use the hexagonal part as a guide.

1 : Crankshaft pulley

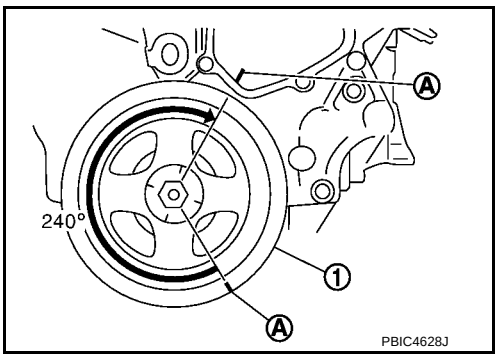

cardiagn.com

- By referring to the figure, measure the valve clearances at locations marked "×" as shown in the table below (locations indicated in the figure).

⇦ : Engine front

- No. 5 cylinder at compression TDC

Measuring position [bank 1 (A)]		No. 1 CYL.	No. 3 CYL.	No. 5 CYL.
No. 5 cylinder at compression TDC	EXH (C)	× (B)		
	INT (D)			× (E)
Measuring position [bank 2 (H)]		No. 2 CYL.	No. 4 CYL.	No. 6 CYL.
No. 5 cylinder at compression TDC	INT (D)		× (F)	
	EXH (C)			× (G)

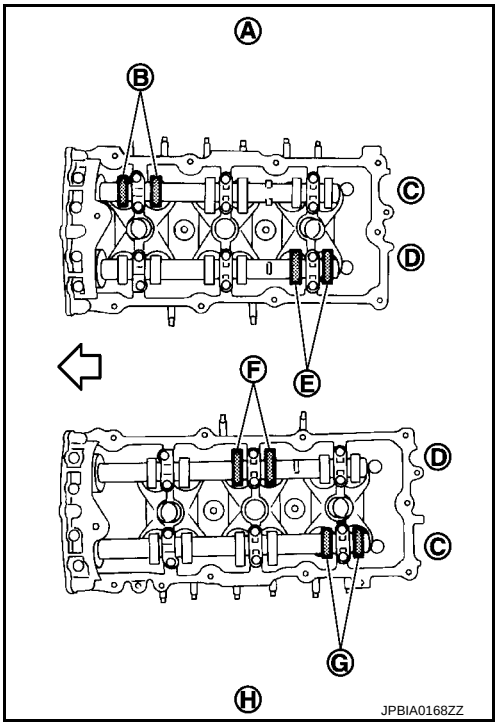

3. Perform adjustment if the measured value is out of the standard. Refer to "ADJUSTMENT".

ADJUSTMENT

- Perform adjustment depending on selected head thickness of valve lifter.

1. Measure the valve clearance. Refer to "INSPECTION".
2. Remove camshaft. Refer to EM-87, "Exploded View".
3. Remove valve lifters at the locations that are out of the standard.
4. Measure the center thickness of the removed valve lifters with a micrometer (A).

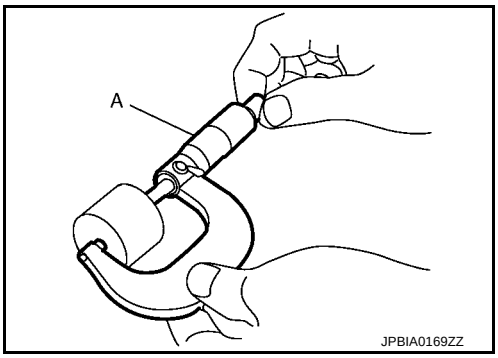

5. Use the equation below to calculate valve lifter thickness for replacement.

Valve lifter thickness calculation: $t = t_1 + (C_1 - C_2)$

t = Valve lifter thickness to be replaced

t_1 = Removed valve lifter thickness

C_1 = Measured valve clearance

C_2 = Standard valve clearance:

Intake : 0.30 mm (0.012 in)

Exhaust : 0.33 mm (0.013 in)

cardiagn.com

- Thickness of new valve lifter can be identified by stamp marks on the reverse side (inside the cylinder).
  Stamp mark 300N indicates 3.00 mm (0.1181 in) in thickness.

  A : Stamp
  B : Thickness of valve lifter

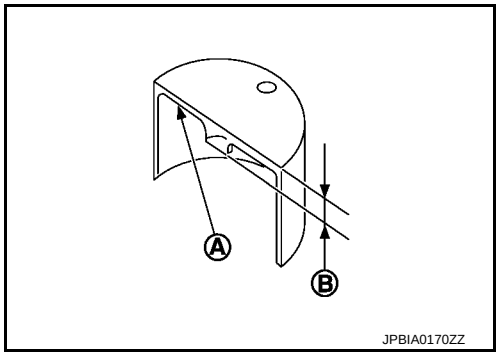

Available thickness of valve lifter: 26 sizes with range 3.00 to 3.50 mm (0.1181 to 0.1378 in) in steps of 0.02 mm (0.0008 in) (when manufactured at factory). Refer to EM-134, "Camshaft".

6. Install selected valve lifter.
7. Install camshaft. Refer to EM-87, "Exploded View".
8. Manually turn crankshaft pulley a few turns.
9. Check that the valve clearances for cold engine are within the specifications by referring to the specified values.
10. Install all removal parts in the reverse order of removal.
11. Warm up the engine, and check for unusual noise and vibration.

cardiagn.com

COMPRESSION PRESSURE

Inspection

INFOID:0000000012409858

1. Warm up engine thoroughly. Then, stop it.
2. Release fuel pressure. Refer to EC-153, "Work Procedure".
3. Remove ignition coil and spark plug from each cylinder. Refer to EM-54, "Exploded View".
4. Connect engine tachometer (not required in use of CONSULT).
5. Install compression gauge with an adapter (commercial service tool) onto spark plug hole.

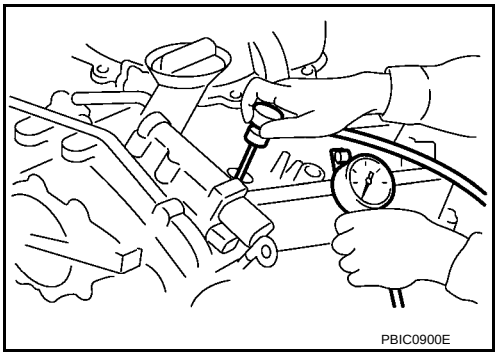

- Use the adapter whose picking up end inserted to spark plug hole is smaller than 20 mm (0.79 in) in diameter. Otherwise, it may be caught by cylinder head during removal.

  a : 20 mm (0.79 in)

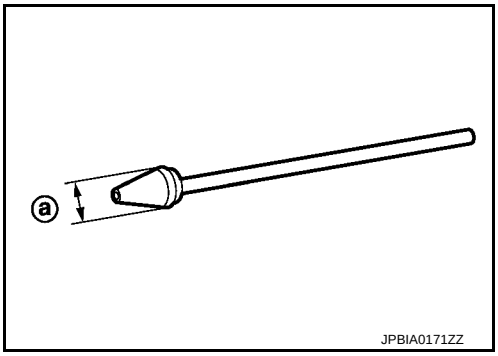

6. With accelerator pedal fully depressed, turn ignition switch to “START” for cranking. When the gauge pointer stabilizes, read the compression pressure and the engine rpm. Perform these steps to check each cylinder.

Compression pressure : Refer to EM-132, "General Specification".

CAUTION:
Always use a fully charged battery to obtain the specified engine speed.
- If the engine speed is out of the specified range, check battery liquid for proper gravity. Check the engine speed again with normal battery gravity.
- If compression pressure is below minimum value, check valve clearances and parts associated with combustion chamber (valve, valve seat, piston, piston ring, cylinder bore, cylinder head, cylinder head gasket). After the checking, measure compression pressure again.
- If some cylinder has low compression pressure, pour small amount of engine oil into the spark plug hole of the cylinder to recheck it for compression.
  - If the added engine oil improves the compression, piston rings may be worn out or damaged. Check piston rings and replace if necessary.
  - If the compression pressure remains at low level despite the addition of engine oil, valves may be malfunctioning. Check valves for damage. Replace valve or valve seat accordingly.
- If two adjacent cylinders have respectively low compression pressure and their compression remains low even after the addition of engine oil, cylinder head gaskets are leaking. In such a case, replace cylinder head gaskets.

7. After inspection is completed, install removed parts.
8. Start the engine, and check that the engine runs smoothly.
9. Perform trouble diagnosis. If DTC appears, erase it. Refer to EC-161, "Description".

cardiagn.com

REMOVAL AND INSTALLATION

ENGINE COVER

Exploded View

INFOID:0000000012409859

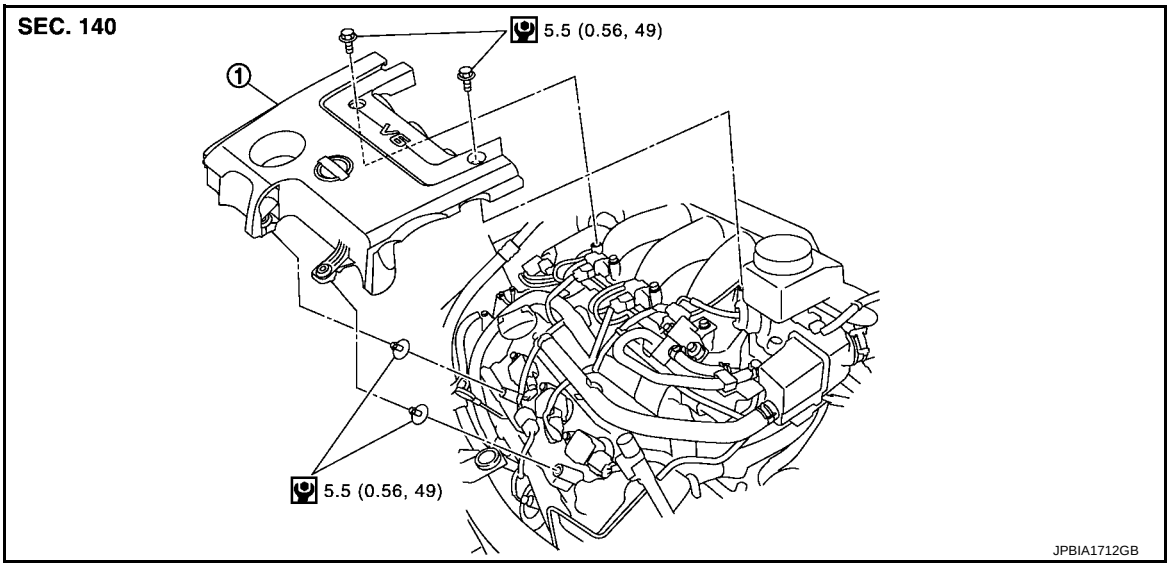

1. Engine cover

: N·m (kg-m, in-lb)

Removal and Installation

INFOID:0000000012409860

REMOVAL

1. Remove air duct (inlet). Refer to EM-27, "Exploded View".
2. Remove engine cover mounting bolts (A) and (B).

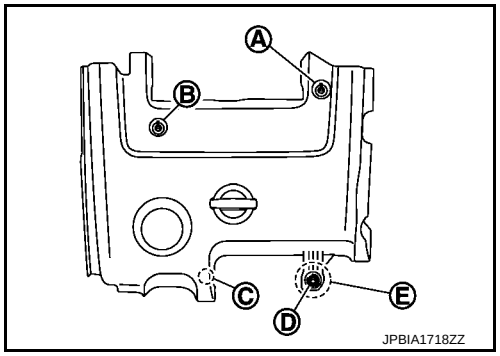

3. Draw and pull out engine cover from engine cover mounting bolts (C) and (D).
   CAUTION:
   Pull engine cover from mounting bolt (D) holding with hand the position (E) as shown in the figure.
4. Remove engine cover mounting bolts (C) and (D) if necessary.

INSTALLATION

Install in the reverse order of removal.

cardiagn.com

DRIVE BELT AUTO-TENSIONER

Exploded View

INFOID:0000000012409861

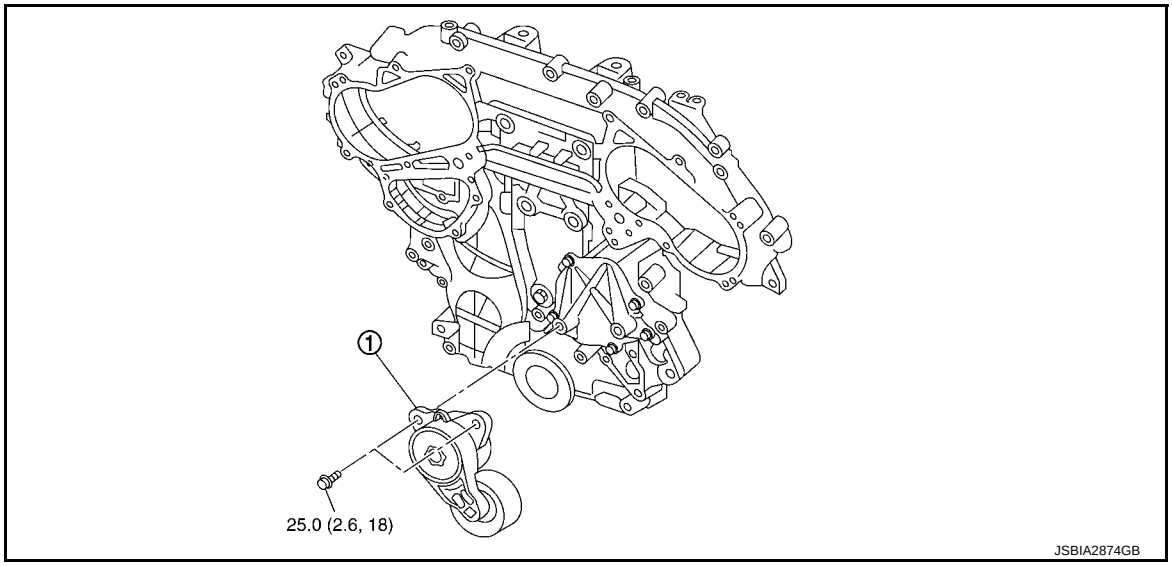

1. Drive belt auto-tensioner

: N·m (kg-m, ft-lb)

: N·m (kg-m, in-lb)

Removal and Installation

INFOID:0000000012409862

Removal

1. Remove drive belt. Refer to EM-14, "Removal and Installation".
2. Remove auto-tensioner.

Installation

Install in the reverse order of removal.

CAUTION:

If there is damage greater than peeled paint, replace drive belt auto-tensioner.

cardiagn.com

AIR CLEANER AND AIR DUCT

Exploded View

INFOID:0000000012409863

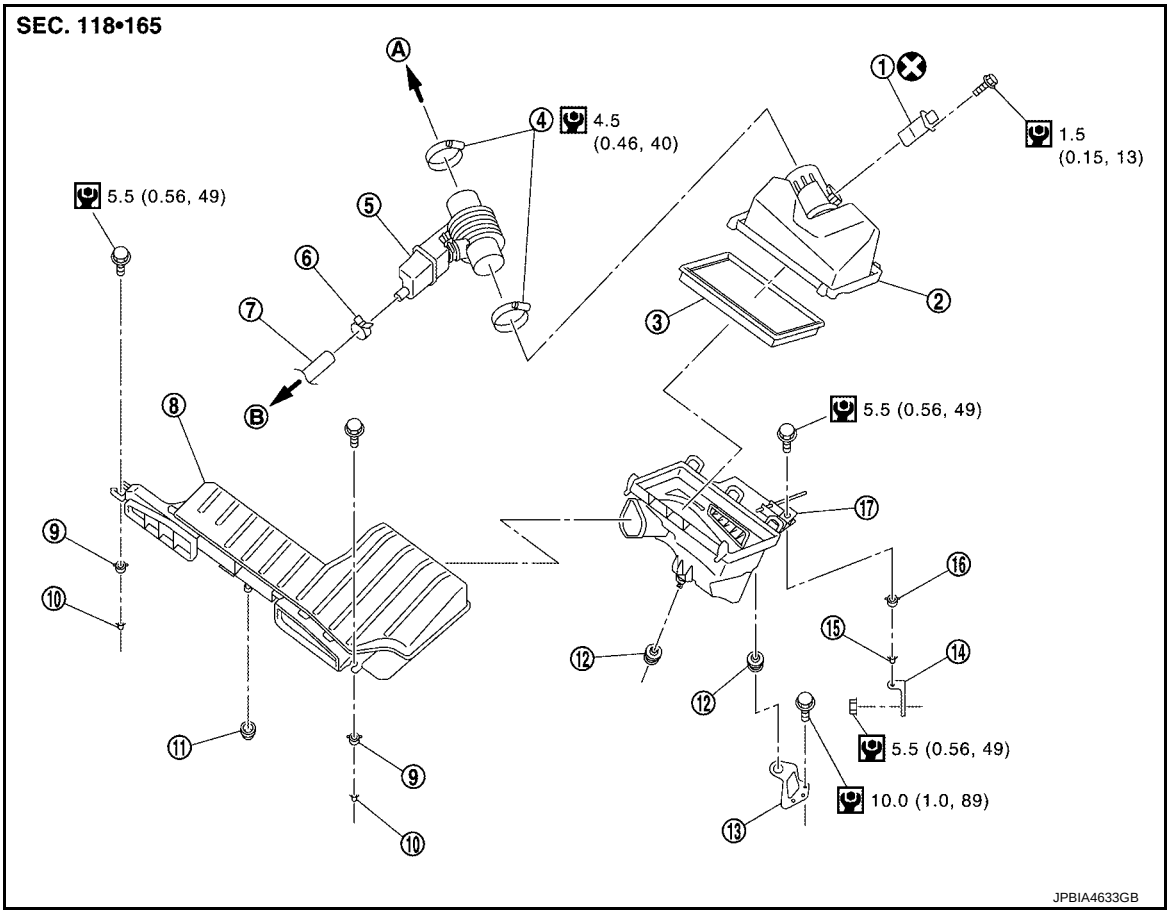

1. Mass air flow sensor	2. Air cleaner case (upper)	3. Air cleaner filter
4. Clamp	5. Air duct assembly	6. Clamp
7. PCV hose	8. Air duct (inlet)	9. Grommet
10. Collar	11. Grommet	12. Grommet
13. Bracket	14. Bracket	15. Collar
16. Grommet	17. Air cleaner case (lower)	
A. To electric throttle control actuator	B. To rocker cover (bank 2)	

: Always replace after every disassembly.

: N·m (kg-m, in-lb)

Removal and Installation

INFOID:0000000012409864

REMOVAL

NOTE:

Mass air flow sensor is removable under the car-mounted condition.

1. Remove air duct (inlet).
2. Disconnect harness connector from mass air flow sensor.
3. Remove PCV hose at air duct assembly side.
4. Remove air cleaner cases (upper and lower) with mass air flow sensor and air duct assembly disconnecting their joints.
   - Add mating marks if necessary for easier installation.
5. Remove mass air flow sensor from air cleaner case (upper), if necessary.

cardiagn.com

CAUTION:
Handle the mass air flow sensor with following cares.
- **Never shock the mass air flow sensor.**
- **Never disassemble the mass air flow sensor.**
- **Never touch the sensor of the mass air flow sensor.**

INSTALLATION

Note the following, and install in the reverse order of removal.
- Install each part, according to the marks put at the removal procedure and tighten clamp.
- Insert pawls (B) of air cleaner case (upper) (1) into 3 notches (A) of air cleaner case (lower) (2) and fix with clips.

⇦ :Vehicle front

- Check that the air cleaner case (upper) is securely installed with no backlash.

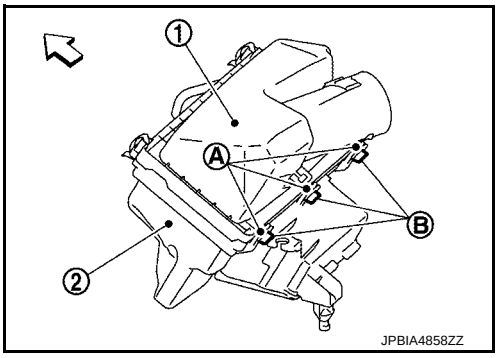

Inspection

INFOID:0000000012409865

INSPECTION AFTER REMOVAL

Inspect air duct assembly for crack or tear.
- If anything found, replace air duct assembly.

cardiagn.com

INTAKE MANIFOLD COLLECTOR

Exploded View

INFOID:0000000012409866

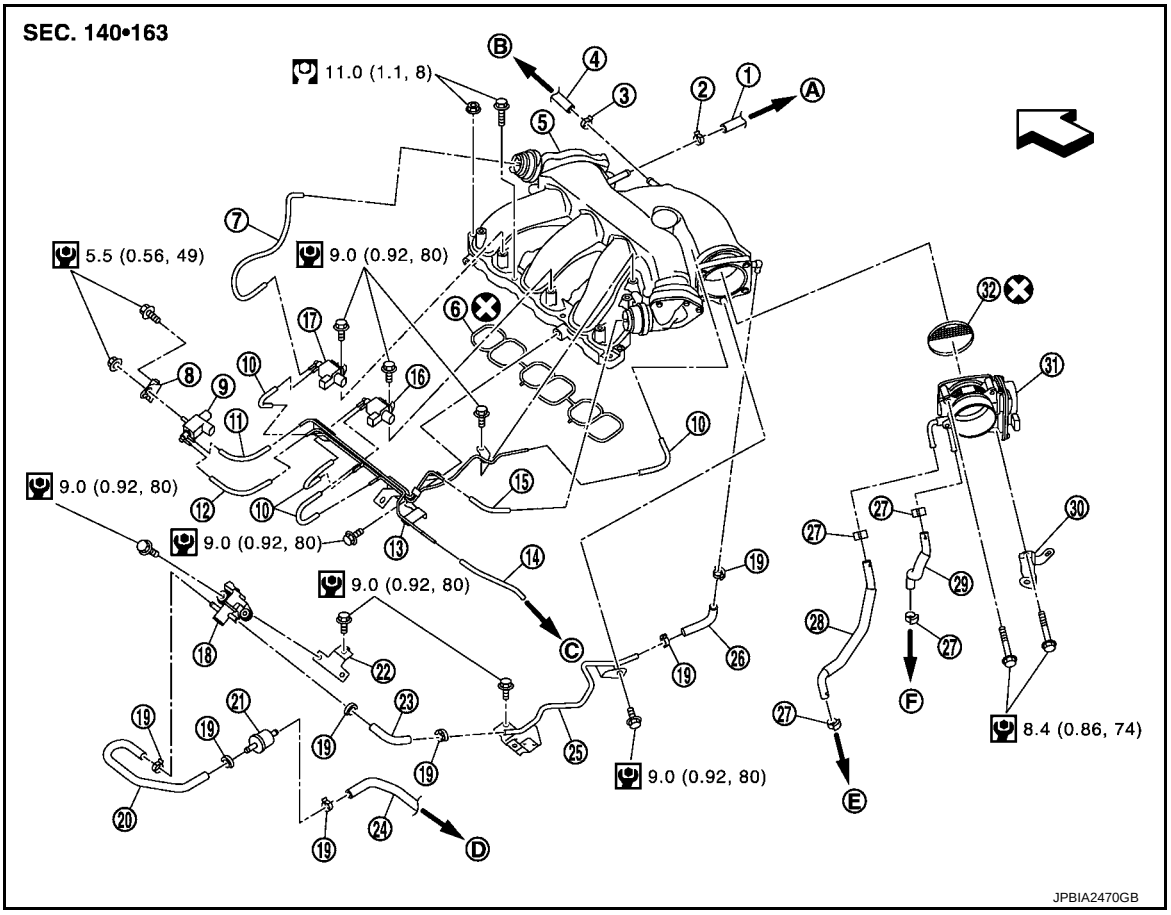

1.	Vacuum hose	2.	Clamp	3.	Clamp
4.	PCV hose	5.	Intake manifold collector	6.	Gasket
7.	Vacuum hose	8.	Bracket	9.	Electronic controlled engine mount control solenoid valve
10.	Vacuum hose	11.	Vacuum hose	12.	Vacuum hose
13.	Vacuum gallery	14.	Vacuum hose	15.	Vacuum hose
16.	VIAS control solenoid valve 2	17.	VIAS control solenoid valve 1	18.	EVAP canister purge volume control solenoid valve
19.	Clamp	20.	EVAP hose	21.	Vacuum tank
22.	Bracket	23.	EVAP hose	24.	EVAP hose
25.	EVAP pipe	26.	EVAP hose	27.	Clamp
28.	Water hose	29.	Water hose	30.	Bracket
31.	Electric throttle control actuator	32.	Gasket		
A.	To brake booster	B.	To rocker cover (bank 1)	C.	To vacuum tube (front)
D.	To vacuum pipe	E.	To heater pipe	F.	To water outlet

⇦ : Engine front

⊗ : Always replace after every disassembly.

: N·m (kg-m, ft-lb)

: N·m (kg-m, in-lb)

cardiagn.com

Removal and Installation

INFOID:0000000012409867

REMOVAL

WARNING:
To avoid the danger of being scalded, never drain engine coolant when the engine is hot.

1. Remove engine cover. Refer to EM-25, "Exploded View".
   CAUTION:
   Be careful not to damage or scratch engine cover.

2. Remove air cleaner cases (upper and lower) with mass air flow sensor and air duct assembly. Refer to EM-27, "Exploded View".
3. Prevent engine coolant leakage by draining engine coolant or attaching plug after disconnecting water hoses. Refer to CO-9, "Draining".
   CAUTION:
   Perform this step when the engine is cold.
   NOTE:
   The above step is not required when removing only intake manifold collector.
4. Remove electric throttle control actuator as follows:
   NOTE:
   Water hose is not required to be disconnected when removing only intake manifold collector.
   - Loosen mounting bolts in the reverse order as shown in the figure to remove.
     CAUTION:
     - **Handle carefully to avoid any shock to electric throttle control actuator.**
     - **Never disassemble.**

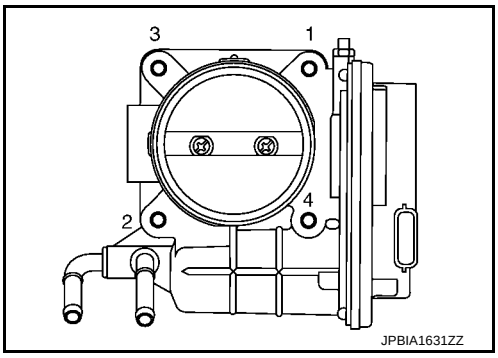

5. Remove the following parts:
   - Vacuum hose
   - PCV hose
   - Electronic controlled engine mount control solenoid valve

6. Remove power steering hose located on the high pressure side from the rear of intake manifold collector.ST-35, "Exploded View"
7. Disconnect EVAP hoses and harness connector from EVAP canister purge volume control solenoid valve.
8. Loosen mounting nuts and bolts in the reverse order as shown in the figure, and remove intake manifold collector and gasket.

   ⇦ : Engine front

   CAUTION:
   Cover engine openings to avoid entry of foreign materials.

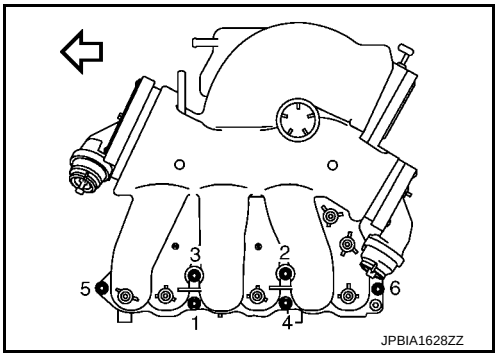

INSTALLATION

Note the following, and install in the reverse order of removal.

Intake Manifold Collector

cardiagn.com

Tighten mounting nuts and bolts in numerical order as shown in the figure.

⇦ : Engine front

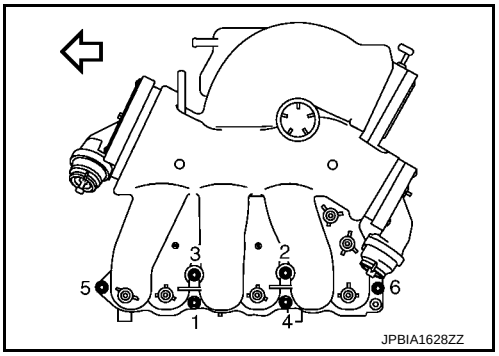

Electric Throttle Control Actuator

- Tighten mounting bolts in numerical order as shown in the figure.
- Perform the “Throttle Valve Closed Position Learning” when harness connector of electric throttle control actuator is disconnected. Refer to EC-148, "Description".
- Perform the “Idle Air Volume Learning” and “Throttle Valve Closed Position Learning” when electric throttle control actuator is replaced. Refer to EC-149, "Description".

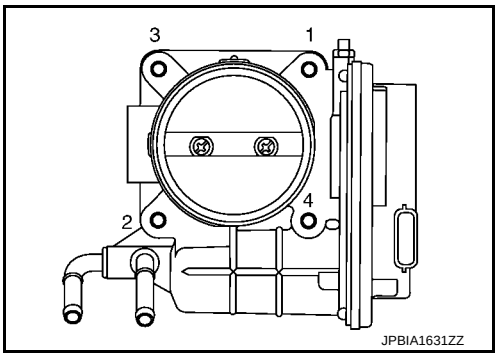

cardiagn.com

INTAKE MANIFOLD

Exploded View

INFOID:0000000012409868

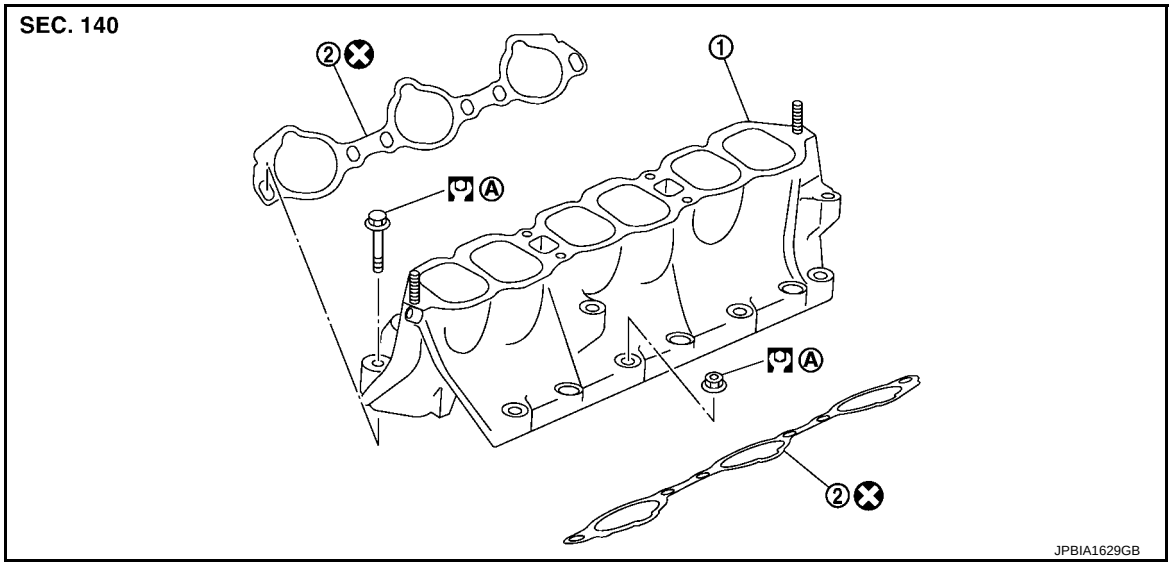

1. Intake manifold
2. Gasket

A. Comply with the assembly procedure when tightening. Refer to EM-32

: Always replace after every disassembly.

: N·m (kg-m, ft-lb)

Removal and Installation

INFOID:0000000012409869

REMOVAL

1. Release fuel pressure. Refer to EC-153, "Work Procedure".
2. Remove intake manifold collector. Refer to EM-30, "Removal and Installation".
3. Remove fuel tube and fuel injector assembly. Refer to EM-49, "Exploded View".
4. Loosen mounting nuts and bolts in the reverse order as shown in the figure to remove intake manifold with power tool.

   : Engine front

   CAUTION:
   - **Put identification marks on the intake manifold and cylinder head with paint for installing in the right direction.**
   - **Cover the opening with tape to prevent the entry of foreign matter into the engine.**

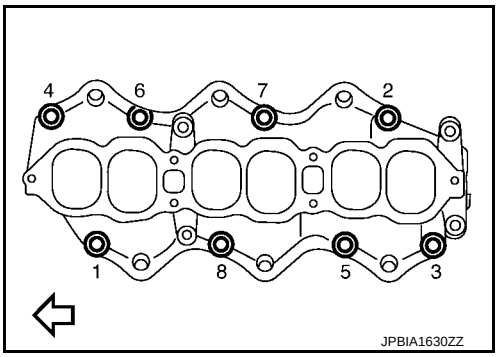

5. Remove gaskets.
   CAUTION:
   Cover engine openings to avoid entry of foreign materials.

INSTALLATION

Note the following, and install in the reverse order or removal.

Intake Manifold

- If stud bolts were removed, install them and tighten to the specified torque below.

cardiagn.com

: 10.8 N·m (1.1 kg-m, 8 ft-lb)

- Tighten all mounting nuts and bolts to the specified torque in two or more steps in numerical order shown in the figure.

⇦ : Engine front

1st step : 7.4 N·m (0.75 kg-m, 5 ft-lb)

2nd step and after : 25.5 N·m (2.6 kg-m, 19 ft-lb)

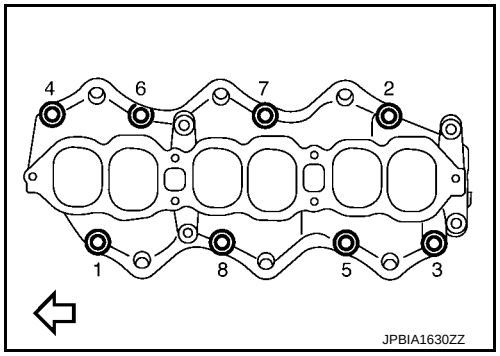

CAUTION:
Install manifold, according to the marks put on the intake manifold and cylinder head.

Inspection

INFOID:0000000012409870

INSPECTION AFTER REMOVAL

Surface Distortion

- Check the surface distortion of the intake manifold mating surface with a straightedge (A) and a feeler gauge (B).

Limit : Refer to EM-134, "Intake Manifold".

- If it exceeds the limit, replace intake manifold.

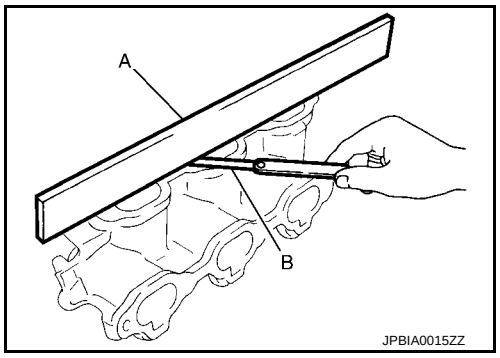

cardiagn.com

EXHAUST MANIFOLD AND THREE WAY CATALYST

Exploded View

INFOID:0000000012409871

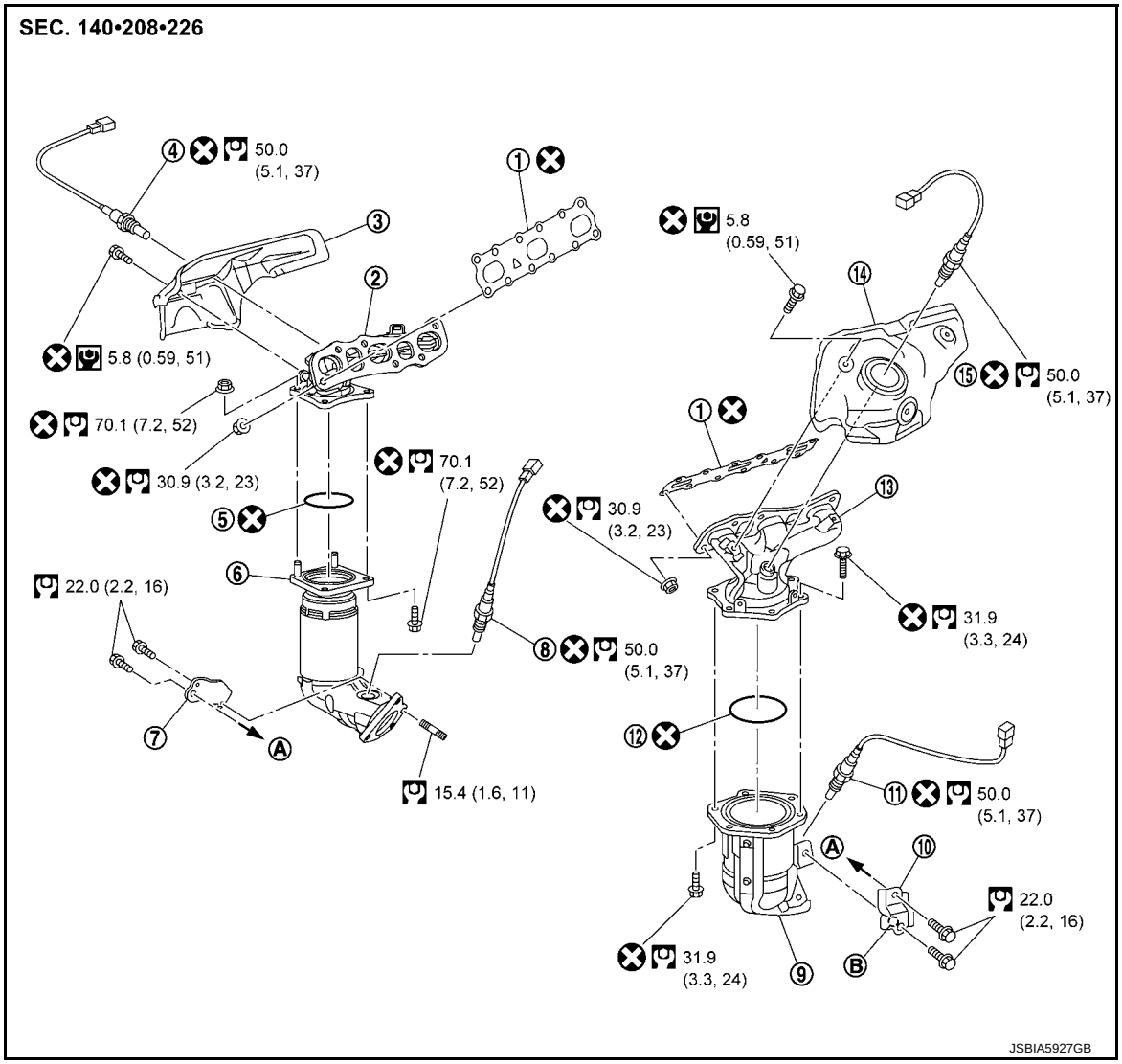

1.	Gasket	2.	Exhaust manifold (bank 1)	3.	Exhaust manifold cover (bank 1)
4.	Air fuel ratio sensor 1 (bank 1)	5.	Ring gasket	6.	Three way catalyst (bank 1)
7.	Three way catalyst support (bank 1)	8.	Heated oxygen sensor 2 (bank 1)	9.	Three way catalyst (bank 2)
10.	Three way catalyst support (bank 2)	11.	Heated oxygen sensor 2 (bank 2)	12.	Ring gasket
13.	Exhaust manifold (bank 2)	14.	Exhaust manifold cover (bank 2)	15.	Air fuel ratio sensor 1 (bank 2)
A.	To oil pan (upper)	B.	Upper mark		

: Always replace after every disassembly.

: N·m (kg-m, ft-lb)

: N·m (kg-m, in-lb)

Removal and Installation

INFOID:0000000012409872

REMOVAL

WARNING:

Perform the work when the exhaust and cooling system have completely cooled down.

cardiagn.com

Remove following parts

1. Bank 1 side
   - Air cleaner case (upper) with mass air flow sensor and air duct assembly: Refer to EM-27, "Exploded View".
   - Engine cover: Refer to EM-25, "Exploded View".
   - Front wiper arm: Refer to WW-53, "WIPER ARM : Removal and Installation".
   - Extension cowl top: Refer to EXT-21, "Exploded View".
   - Heat insulator: Refar to ST-13, "Exploded View".
2. Bank 2 side
   - Engine under cover.
3. Remove exhaust front tube. Refer to EX-5, "Exploded View".
4. Disconnect harness connector and remove air fuel ratio sensor 1 on both banks with the heated oxygen sensor wrench [SST: KV10117100 (J-3647-A)] (B).
   - Put marks to identify installation positions of each air fuel ratio sensor 1.

   CAUTION:
   - **If air fuel ratio sensor is dropped on to a hard surfacelike a concrete floor from a height of 0.5 m (19.69 in) or more, discard the sensor and use a new one.**
   - **Clean the mounting area of air fuel ratio sensor beforeinstalling a new air fuel ratio sensor.**

   NOTE:
   Figure is shown as an example of bank 2 (A).

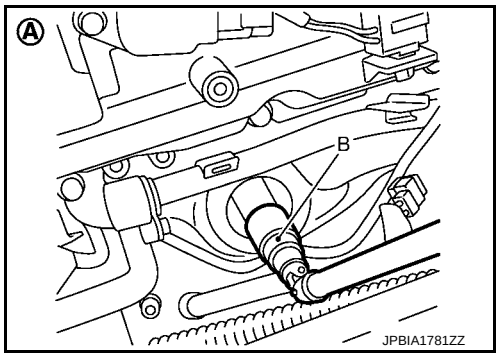

5. Disconnect harness connector and remove heated oxygen sensor 2 on both banks with the heated oxygen sensor wrench [SST: KV10114400 (J-38365)] (B).

   A : Bank 1
   C : Bank 2

   - Put marks to identify installation positions of each heated oxygen sensor 2.

   CAUTION:
   - **If air fuel ratio sensor is dropped on to a hard surfacelike a concrete floor from a height of 0.5 m (19.69 in) or more, discard the sensor and use a new one.**
   - **Clean the mounting area of air fuel ratio sensor beforeinstalling a new air fuel ratio sensor.**

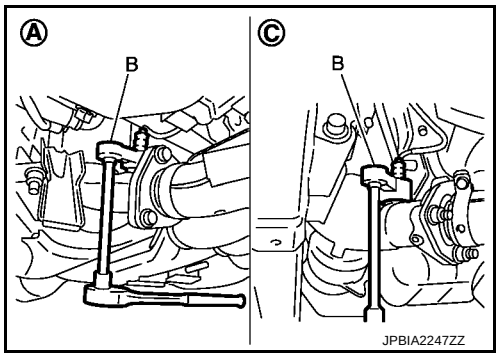

6. Remove exhaust manifold covers (bank 1 and bank 2).
7. Remove three way catalyst support mounting bolts (bank 1 and bank 2).
8. Remove three way catalysts by loosening bolts first and then removing nuts. (Stud bolt and flange bolt type)

   CAUTION:
   Handle carefully to avoid any shock to three way catalyst.

cardiagn.com

9. Loosen mounting nuts in the reverse order as shown in the figure to remove exhaust manifolds (bank 1 and bank 2).

   A : Bank 1
   B : Bank 2
   ⇦ : Engine front

   NOTE:
   Disregard No. 7 and 8 when loosing.

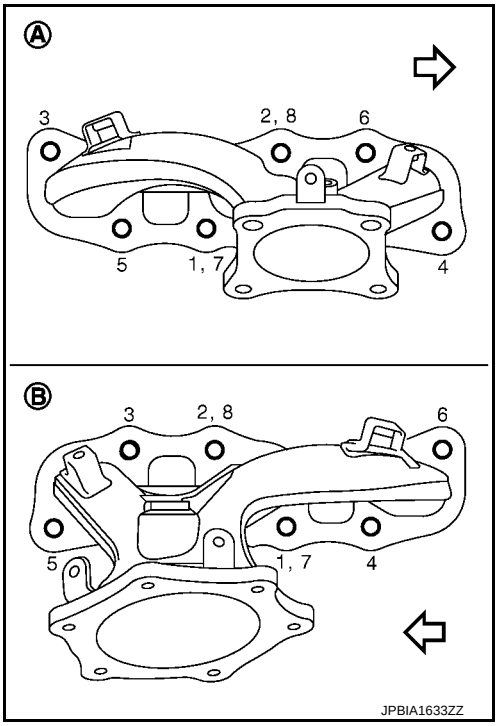

10. Remove gaskets.
    CAUTION:
    Cover engine openings to avoid entry of foreign materials.

INSTALLATION

Note the following, and install in the reverse order of removal.

Exhaust Manifold Gasket

Install in the direction indicated in the figure.

   A : Bank 1
   B : Triangle press
   C : Bank 2
   ⇦ : Engine front

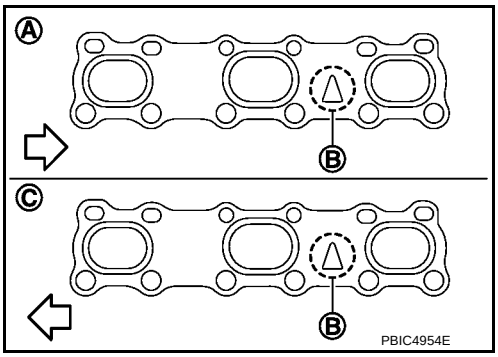

Exhaust Manifold

- If stud bolts were removed, install them and tighten to the torque specified below.

   : 15.4 N·m (1.6 kg-m, 11 ft-lb)

cardiagn.com

- Tighten mounting nuts in numerical order as shown in the figure.

A : Bank 1
B : Bank 2
⇦ : Engine front

NOTE:
No. 7 and 8 mean double tightening of nuts No. 1 and 2.

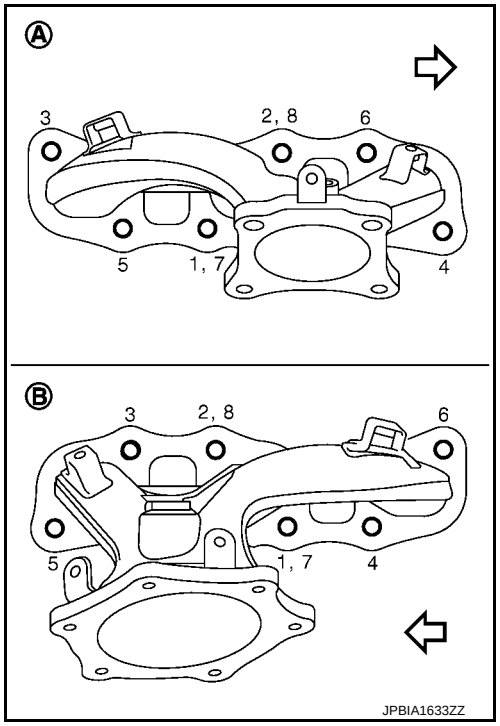

Three Way Catalyst (bank 2)

1. Temporarily tighten upper side bolts (B) and lower side bolt (A) shown in the figure.

⇦ : Engine front

2. Tighten the upper side bolts (B) shown in the figure. (specified torque)
3. Tighten all the lower side bolts [the other four except (B)]. (specified torque)

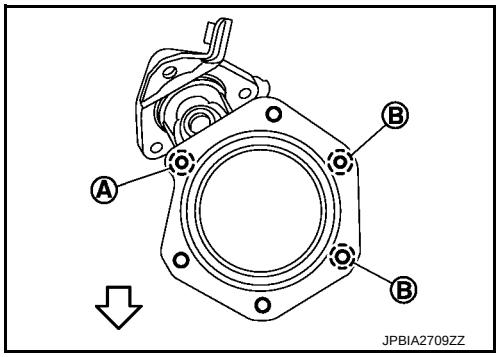

Three Way Catalyst Supports

1. Temporarily tighten three way catalyst support mounting bolts.
2. Tighten three way catalyst support mounting bolts to oil pan (upper).
3. Tighten three way catalyst support mounting bolts to three way catalyst.

Air Fuel Ratio Sensor 1 and Heated Oxygen Sensor 2

- Install air fuel ratio sensor 1 and heated oxygen sensor 2 in the original position.
- Install referring the following if the installation positions cannot be identified.

Glass tube color

Air fuel ratio sensor 1	**: Black**
Heated oxygen sensor 2	**: Gray**

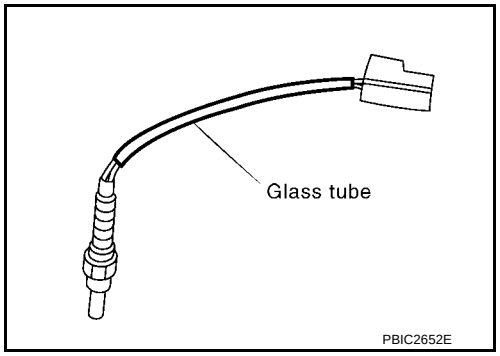

CAUTION:

- **Before installing a new air fuel ratio sensor and a new heated oxygen sensor, clean exhaust system threads using oxygen sensor thread cleaner (commercial service tool: J-43897-18 or J-43897-12) and apply anti-seize lubricant (commercial service tool).**
- **Never over torque air fuel ratio sensor and heated oxygen sensor. Doing so may cause damage to air fuel ratio sensor and heated oxygen sensor, resulting in “MIL” coming on.**

cardiagn.com

- **Prevent rust preventives from adhering to the sensor body.**

Inspection

INFOID:0000000012409873

INSPECTION AFTER REMOVAL

Surface Distortion

- Check the surface distortion of the exhaust manifold mating surface with a straightedge and a feeler gauge.

Limit : Refer to EM-134, "Exhaust Manifold".

- If it exceeds the limit, replace exhaust manifold.

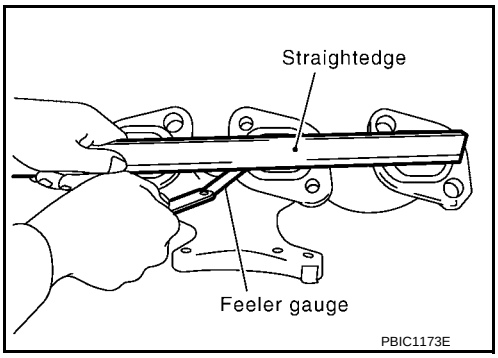

cardiagn.com

OIL PAN AND OIL STRAINER

Exploded View

INFOID:0000000012409874

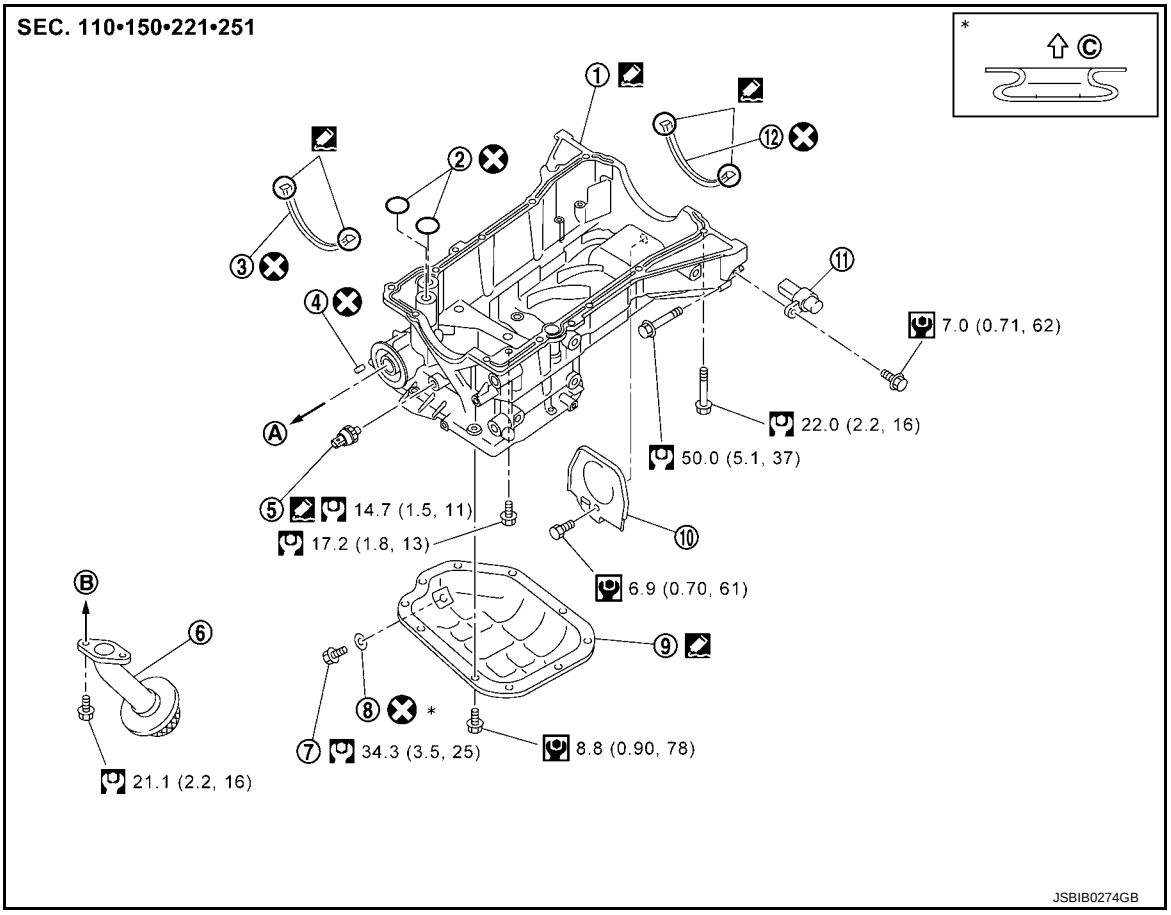

1.	Oil pan (upper)	2.	O-ring	3.	Oil pan gasket (front)
4.	Relief valve	5.	Oil pressure sensor	6.	Oil strainer
7.	Drain plug	8.	Drain plug washer	9.	Oil pan (lower)
10.	Rear plate cover	11.	Crankshaft position sensor (POS)	12.	Oil pan gasket (rear)
A.	To oil cooler	B.	To oil pump	C.	Oil pan side

: Always replace after every disassembly.

: N·m (kg-m, ft-lb)

: N·m (kg-m, in-lb)

: Sealing point

Removal and Installation

INFOID:0000000012409875

REMOVAL

CAUTION:

To avoid the danger of being scalded, never drain engine oil when the engine is hot.

NOTE:

When removing oil pan (lower) or oil strainer only, take step 1 then step 32 and 33.

1. Drain engine oil. Refer to LU-9, "Draining".
   CAUTION:
   Never spill engine oil on drive belt.

cardiagn.com

2. Drain engine coolant. Refer to CO-9, "Draining".
   CAUTION:
   Never spill engine coolant on drive belt.
3. Remove following parts:
   - Front road wheel and tires (RH and LH).
   - Splash guard (RH and LH): Refer to EXT-23, "Exploded View".
   - Exhaust front tube: Refer to EX-5, "Exploded View".
   - Drive belt: Refer to EM-14, "Removal and Installation".
   - Engine under cover.
   - Crankshaft position sensor.
4. Remove A/C compressor with piping connected, and temporarily secure it to aside. Refer to HA-31, "COMPRESSOR : Removal and Installation".
5. Remove oil level gauge. Refer to EM-96, "Exploded View".
6. Remove air duct (inlet). Refer toEM-27, "Removal and Installation".
7. Remove extension cowl top. Refer to EXT-22, "Removal and Installation".
8. Remove high pressure side piping from intake manifold collector. Refer to EM-29, "Exploded View".
9. Remove heater tube bracket (front). Refer to HA-46, "Exploded View".
10. Remove vacuum hose from engine mounting (front and rear). Refer to EM-57, "Exploded View".
11. Remove front drive shaft (RH). Refer to FAX-19, "RIGHT SIDE : Removal and Installation".
12. Remove heat insulator. Refer to ST-13, "Exploded View".
13. Remove steering lower joint. Refer to ST-16, "Exploded View".
14. Remove three way catalyst (bank 1 and bank 2). Refer to EM-34, "Removal and Installation"
15. Remove oil pressure switch.
16. Remove oil filter. Refer to LU-11, "Removal and Installation".
17. Remove engine mounting insulator (front and rear) fixing nuts. Refer to EM-57, "Exploded View".
18. Remove front drive shaft (LH) from transaxle. Refer to FAX-18, "LEFT SIDE : Removal and Installation".
19. Remove CVT fluid cooler hose from front suspension member.
20. Remove the connector of auto levelizer control unit and clip.
21. Remove the mounting nuts of stabilizer connecting rod upper side. Refer to FSU-15, "Exploded View".
22. Remove power steering return hose and power steering return tube from front suspension member. Refer to ST-35, "Exploded View".
23. Support transaxle assembly with a suitable jack.
    CAUTION:
    When setting the transmission jack, be careful not to allow it to collide against the drain plug.
24. Remove engine mounting insulator (LH) mounting bolts from front suspension member. Refer to EM-57, "Exploded View".
25. Remove rear torque rod and rear torque rod bracket. Refer to EM-58, "Removal and Installation".
26. Support front suspension member assembly with a suitable jack.
27. Remove member stay, front suspension member fixing bolts and bolts. Refer to FSU-17, "Exploded View".
28. Lower the jack on the front suspension side to the height where the hose of power steering is not stretched taut.
29. Remove support bearing bracket. Refer to FAX-17, "Exploded View"
30. Remove oil cooler and water pipe. Refer toLU-12, "Exploded View".
31. Remove oil pan (lower) as follows:

cardiagn.com

a. Loosen mounting bolts in the reverse order as shown in the figure to remove.

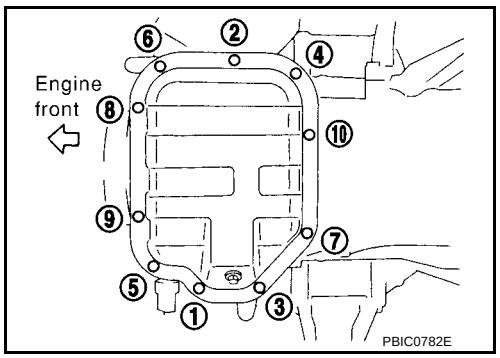

b. Insert the seal cutter [SST: KV10111100 (J-37228)] (A) between oil pan (upper) and oil pan (lower).
CAUTION:
- **Be careful not to damage the mating surfaces.**
- **Never insert a screwdriver, this will damage the mating surfaces.**

c. Slide the seal cutter by tapping on the side of tool with a hammer. Remove oil pan (lower).

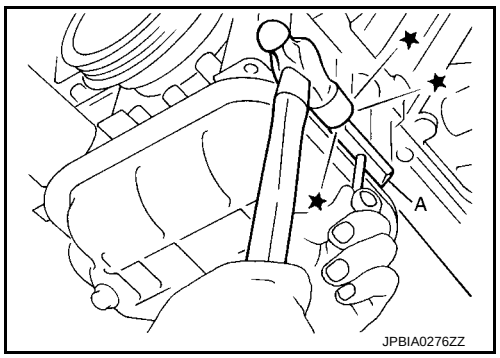

32. Remove oil strainer.
33. Loosen mounting bolts in the reverse order as shown in the figure to remove.
    - Insert the seal cutter [SST: KV10111100 (J-37228)] between oil pan (upper) and cylinder block. Slide seal cutter by tapping on the side of tool with a hammer. Remove oil pan (upper).
    CAUTION:
    - **Be careful not to damage the mating surfaces.**
    - **Never insert a screwdriver, this will damage the mating surfaces.**

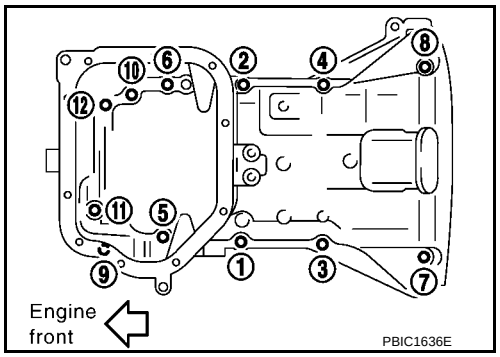

34. Remove O-rings (2) from bottom of cylinder block (1) and oil pump (3).

⇦ : Engine front

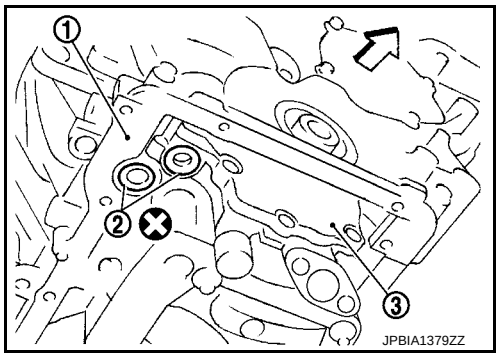

cardiagn.com

35. Remove oil pan gaskets (1).

A : Notch
B : Protrusion
⇦ : Engine front

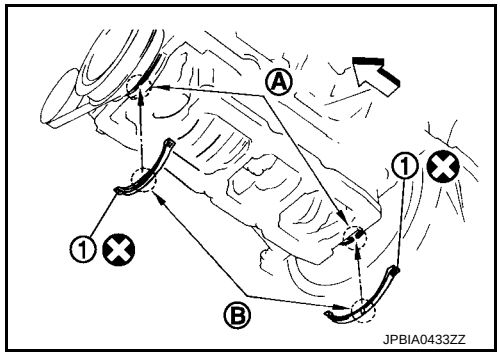

INSTALLATION

CAUTION:
Do not reuse O-rings or drain plug washer.

1. Install oil pan (upper) as follows:

a. Use a scraper to remove old liquid gasket from mating surfaces.
CAUTION:
Never scratch or damage the mating surfaces when cleaning off old liquid gasket.
- Also remove old liquid gasket from mating surface of cylinder block.
- Remove old liquid gasket from the bolt holes and threads.

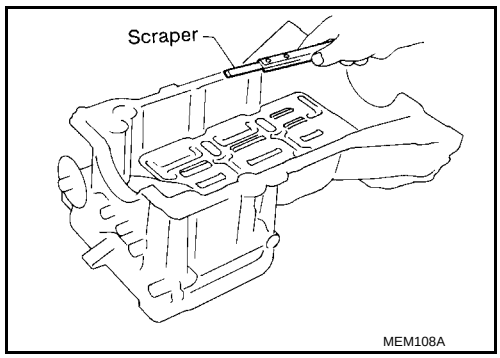

b. Install new O-rings (2) on the bottom of cylinder block (1) and oil pump (3).

⇦ : Engine front

CAUTION:
Do not reuse O-rings.

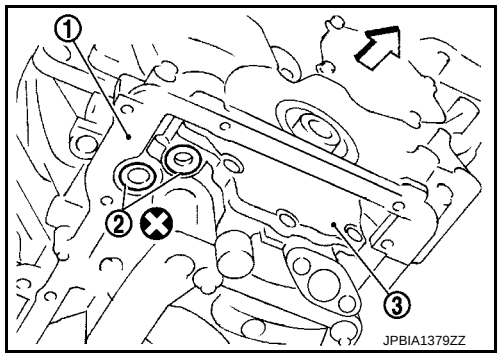

c. Install new oil pan gaskets.
- Apply liquid gasket to new oil pan gaskets as shown in the figure.

C : Sealing point
a : 15 mm (0.59 in)
b : 5 mm (0.20 in)

Use Genuine RTV Silicone Sealant or equivalent. Refer to GI-22, "Recommended Chemical Products and Sealants".

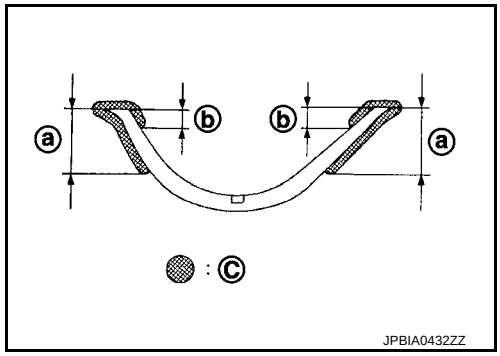

cardiagn.com

- To install, align protrusion (B) of oil pan gasket with notches (A) of front timing chain case and rear oil seal retainer.

  ⇦ : Engine front

- Install oil pan gasket (1) with smaller arc to front timing chain case side.

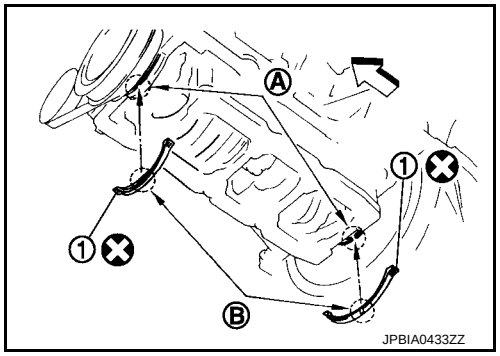

d. Apply a continuous bead of liquid gasket with the tube presser (commercial service tool) to the cylinder block mating surface of oil pan (upper) to a limited portion as shown in the figure.

b : 35 mm (1.38 in)

c : ϕ3.5 - 4.5 mm (0.138 - 0.177 in)

⇦ : Engine front

Use Genuine RTV Silicone Sealant or equivalent. Refer to **GI-22, "Recommended Chemical Products and Sealants"****.**

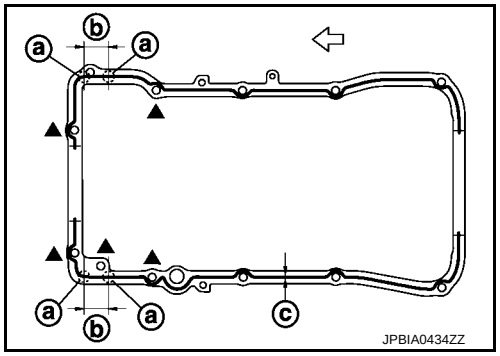

CAUTION:

- **For bolt holes with ▲ marks (5 locations), apply liquid gasket outside the holes.**
- **Apply a bead of 4.5 to 5.5 mm (0.177 to 0.217 in) diameter to area (a).**
- **Attaching should be done within 5 minutes after coating.**

e. Install oil pan (upper).

CAUTION:

Install avoiding misalignment of both O-rings.

- Tighten mounting bolts in numerical order as shown in the figure.
- There are three types of mounting bolts. Refer to the following for locating bolts.

M8 × 135 mm (5.31 in)	**: 11**
M8 × 92 mm (3.62 in)	**: 5, 7, 8**
M8 × 25 mm (0.98 in)	**: Except the above**

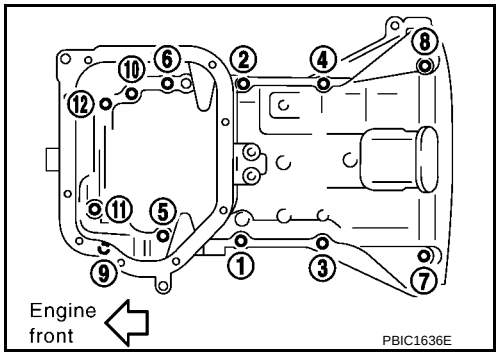

2. Install oil strainer to oil pump.
3. Install oil pan (lower) as follows:

a. Use scraper (A) to remove old liquid gasket from mating surfaces.

- Remove old liquid gasket from the bolt holes and thread.

CAUTION:

Never scratch or damage the mating surfaces when cleaning off old liquid gasket.

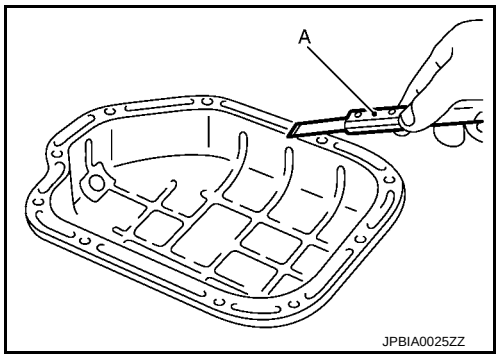

cardiagn.com

b. Apply a continuous bead of liquid gasket with the tube presser (commercial service tool) (A) to the oil pan (lower) as shown in the figure.

b : ϕ4.0 - 5.0 mm (0.157 - 0.197 in)

Use Genuine RTV Silicone Sealant or equivalent. Refer to GI-22, "Recommended Chemical Products and Sealants".
CAUTION:
Attaching should be done within 5 minutes after coating.

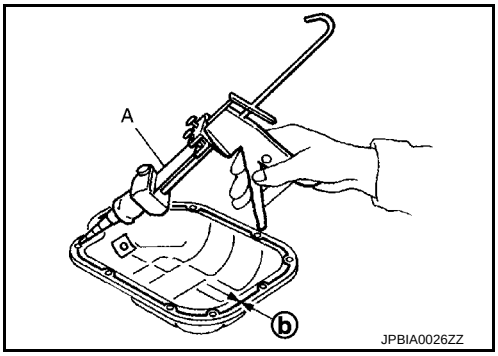

c. Install oil pan (lower).
   - Tighten mounting bolts in numerical order as shown in the figure.

4. Install oil pan drain plug.
   - Refer to the figure of components of former page for installation direction of drain plug washer. Refer to EM-39, "Exploded View".

   CAUTION:
   Do not reuse drain plug washer.

5. Install in the reverse order of removal after this step.
   NOTE:
   At least 30 minutes after oil pan is installed, pour engine oil.

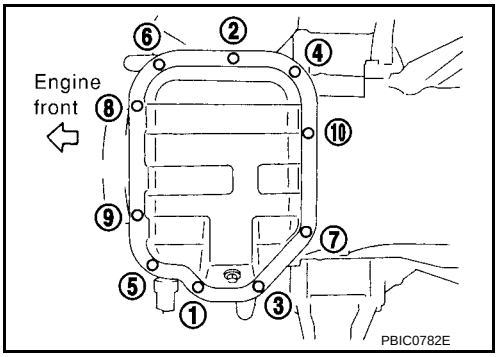

Inspection

INFOID:0000000012409876

INSPECTION AFTER REMOVAL

Clean oil strainer if any object attached.

INSPECTION AFTER INSTALLATION

1. Check the engine oil level and adjust engine oil. Refer to LU-8, "Inspection".
2. Start engine, and check there is no leakage of engine oil.
3. Stop engine and wait for 10 minutes.
4. Check the engine oil level again. Refer to LU-8, "Inspection".

cardiagn.com

OIL SEAL

VALVE OIL SEAL

VALVE OIL SEAL : Removal and Installation

INFOID:0000000012409877

REMOVAL

1. Remove camshafts. Refer to EM-88, "Removal and Installation".
2. Remove valve lifters. Refer to EM-87, "Exploded View".
3. Turn crankshaft until the cylinder requiring new oil seals is at TDC. This will prevent valve from dropping into cylinder.
4. Remove valve collet.
   - Compress valve spring with the valve spring compressor [SST: KV10116200 (J-26336-A)] (A), the attachment [SST: KV10115900 (J-26336-20)] (C), the adapter [SST: KV10109220 (—)] (B). Remove valve collet with a magnet hand.

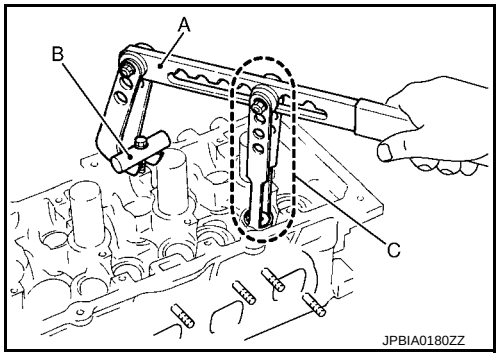

CAUTION:
- **Be careful not to damage valve lifter holes.**
- **Install Tool (A) in the center of valve spring retainer to press it.**

1 : Valve spring retainer

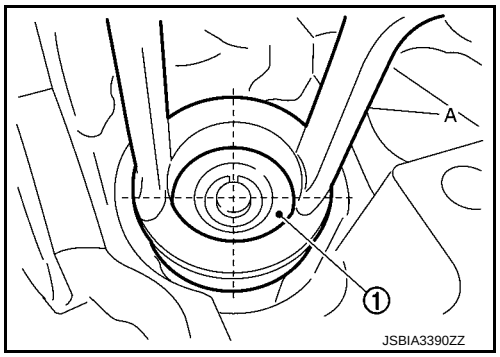

5. Remove valve spring retainer, and valve spring.
6. Remove valve oil seal using the valve oil seal puller [SST: KV10107902 (J-38959)] (A).

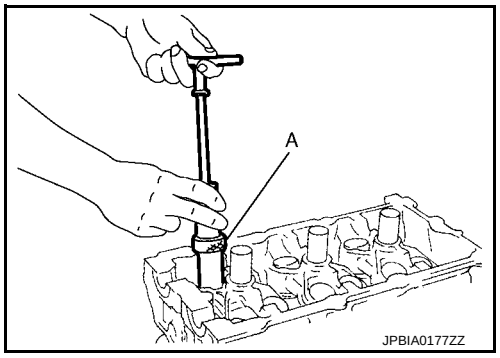

INSTALLATION

1. Apply new engine oil on new valve oil seal joint and seal lip.

cardiagn.com

2. Using the valve oil seal drift [SST: KV10115600 (J-38958)] (A), press fit valve seal to height (b) shown in the figure.
   NOTE:
   Dimension: Height measured before valve spring seat installation

   Intake and exhaust : 14.3 - 14.9 mm (0.563 - 0.587 in)

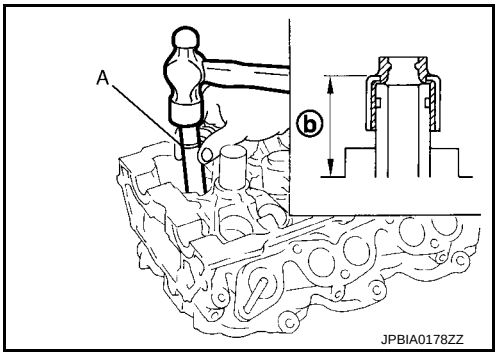

3. Install in the reverse order of removal after this step.

FRONT OIL SEAL

FRONT OIL SEAL : Removal and Installation

INFOID:0000000012409878

REMOVAL

1. Remove the following parts:
   - Road wheel and tire (RH)
   - Splash guard (RH): Refer to EXT-23, "Exploded View".
   - Drive belt: Refer to EM-14, "Removal and Installation".
   - Crankshaft pulley: Refer to EM-68, "Exploded View".
2. Remove front oil seal using a suitable tool.
   CAUTION:
   Be careful not to damage front timing chain case and crankshaft.

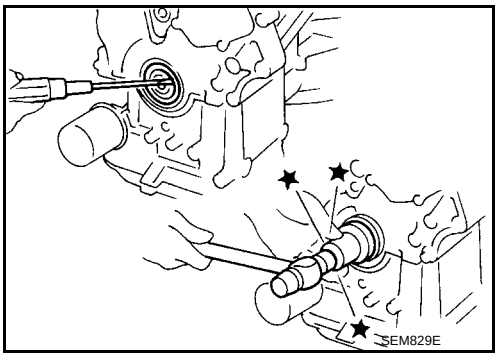

INSTALLATION

1. Apply new engine oil to both oil seal lip and dust seal lip of new front oil seal.
2. Install front oil seal.
   - Install front oil seal so that each seal lip is oriented as shown in the figure.

   A : Oil seal lip
   B : Dust seal lip
   ⇦ : Engine inside
   ⬅ : Engine outside

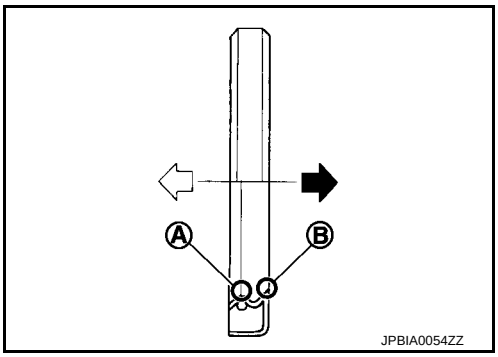

cardiagn.com

- Using a suitable drift, press-fit until the height of front oil seal is level with the mounting surface.
  - Suitable drift: outer diameter 60 mm (2.36 in), inner diameter 50 mm (1.97 in).
- Check the garter spring is in position and seal lips not inverted.

CAUTION:
- **Be careful not to damage front timing chain case and crankshaft.**
- **Press-fit straight and avoid causing burrs or tilting oil seal.**

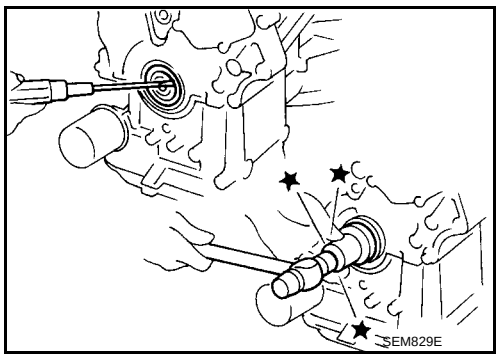

3. Install in the reverse order of removal after this step.

REAR OIL SEAL

REAR OIL SEAL : Removal and Installation

INFOID:0000000012409879

REMOVAL

1. Remove transaxle assembly. Refer to TM-215, "Removal and Installation".
2. Remove drive plate. Refer to EM-108, "Exploded View".
3. Remove oil pan (upper). Refer to EM-39, "Exploded View".
4. Use a seal cutter (SST) to cut away liquid gasket and remove rear oil seal retainer.

   CAUTION:
   Be careful not to damage mating surfaces.
   NOTE:
   Regard both rear oil seal and retainer an assembly.

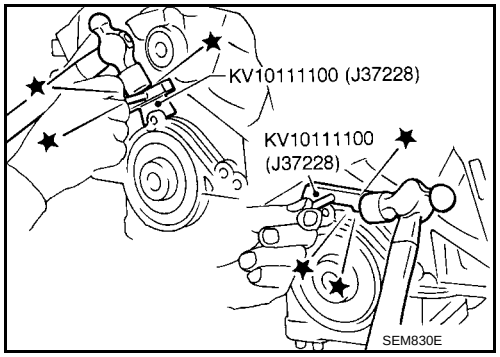

INSTALLATION

1. Remove old liquid gasket on mating surfaces of cylinder block and oil pan (upper) using scraper.
2. Apply new engine oil to both oil seal lip (A) and dust seal lip (B) of new oil seal retainer.

   ⇦ : Engine inside

   ⬅ : Engine outside

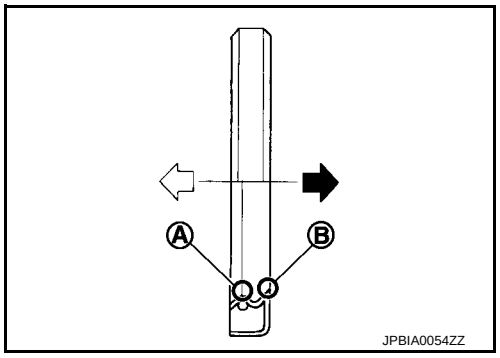

3. Apply a continuous bead of liquid gasket with the tube presser (commercial service tool) to rear oil seal retainer as shown in the figure.

   a : ϕ2.0 - 3.0 mm (0.08 - 0.12 in)

   Use Genuine RTV Silicone Sealant or equivalent. Refer to GI-22, "Recommended Chemical Products and Sealants".
   CAUTION:
   Attaching should be done within 5 minutes after coating.

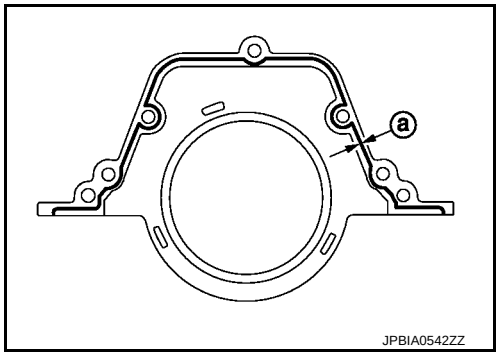

4. Install rear oil seal retainer to cylinder block. Refer to EM-108, "Exploded View".

cardiagn.com

- Check the garter spring is in position and seal lips not inverted.

5. Install in the reverse order of removal after this step.

cardiagn.com

FUEL INJECTOR AND FUEL TUBE

Exploded View

INFOID:0000000012409880

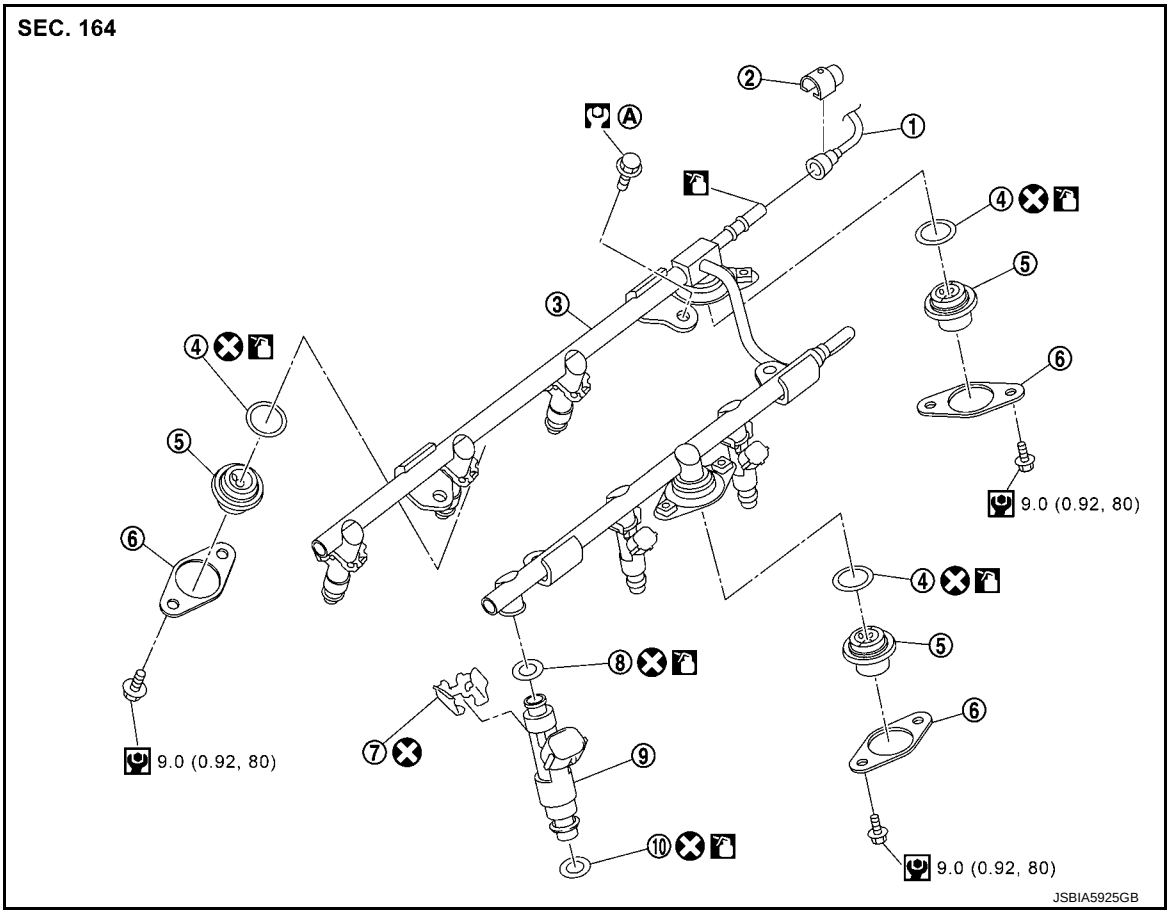

1. Fuel feed hose	2. Quick connector cap	3. Fuel tube
4. O-ring	5. Fuel damper	6. Fuel damper cap
7. Clip	8. O-ring (black)	9. Fuel injector
10. O-ring (green)		
A. Comply with the assembly procedure when tightening. Refer to EM-49		

: Always replace after every disassembly.

: N·m (kg-m, ft-lb)

: N·m (kg-m, in-lb)

: Should be lubricated with oil.

CAUTION:
Never remove or disassemble parts unless instructed as shown in the figure.

Removal and Installation

INFOID:0000000012409881

REMOVAL

WARNING:
- **Put a "CAUTION: FLAMMABLE" sign in the workshop.**
- **Be sure to work in a well ventilated area and furnish workshop with a CO_2 fire extinguisher.**
- **Never smoke while servicing fuel system. Keep open flames and sparks away from the work area.**

cardiagn.com

- **To avoid the danger of being scalded, never drain engine coolant when engine is hot.**

1. Remove air duct (inlet), air cleaner cases (upper and lower) with mass air flow sensor and air duct assembly. Refer to EM-27, "Exploded View".
2. Remove engine cover. Refer to EM-25, "Exploded View".
3. Release the fuel pressure. Refer to EC-153, "Work Procedure".
4. Drain engine coolant, or when water hoses are disconnected, attach plug to prevent engine coolant leakage. Refer to CO-9, "Draining".
   CAUTION:
   Perform this step when the engine is cold.
5. Remove intake manifold collector. Refer to EM-29, "Exploded View".
6. When separating fuel feed hose and fuel tube connection, disconnect quick connector as follows:

a. Remove quick connector cap from quick connector.

b. Disconnect quick connector from fuel tube as follows:
   CAUTION:
   Disconnect quick connector by using the quick connector release (commercial service tool: J-45488), not by picking out retainer tabs.

i. With the sleeve side of quick connector release facing to quick connector, install the quick connector release onto fuel tube.

ii. Insert the quick connector release (A) into quick connector (2) until sleeve (B) contacts and goes no further. Hold quick connector release on that position.

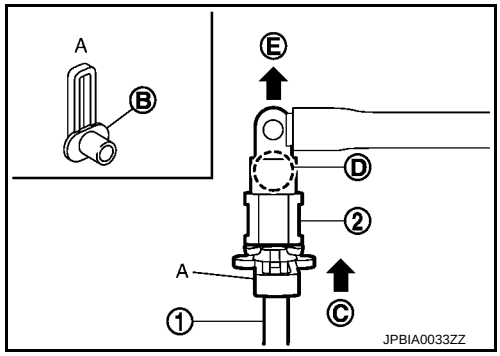

C : Insert and retain

   CAUTION:
   Inserting quick connector release hard will not disconnect quick connector. Hold quick connector release where it contacts and goes no further.

iii. Draw and pull out quick connector straight from fuel tube (1).
   CAUTION:
   - **Pull quick connector (E) holding position (D) as shown in the figure.**
   - **Never pull with lateral force applied. O-ring inside quick connector may be damaged.**
   - **Prepare container and cloth beforehand as fuel will leakage out.**
   - **Avoid fire and sparks.**
   - **Keep parts away from heat source. Especially, be careful when welding is performed around them.**
   - **Never expose parts to battery electrolyte or other acids.**
   - **Never bend or twist connection between quick connector and fuel feed hose (with damper) during installation/removal.**
   - **To keep clean the connecting portion and to avoid damage and foreign materials, cover them completely with plastic bags, etc. (A) or something similar.**

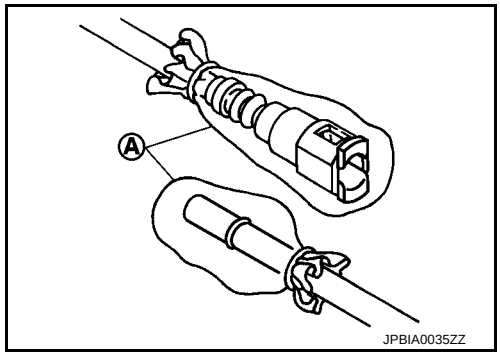

7. Disconnect harness connector from fuel injector.

cardiagn.com

8. Loosen mounting bolts in the reverse order as shown in the figure, and remove fuel tube and fuel injector assembly.

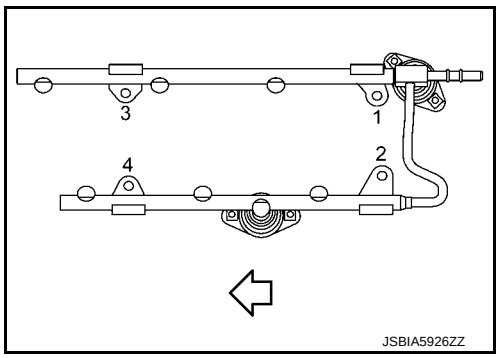

⇦ : Engine front

CAUTION:
Never tilt fuel tube, or remaining fuel in pipes may flow out from pipes.

9. Remove fuel injector from fuel tube as follows:

a. Open and remove clip (1).

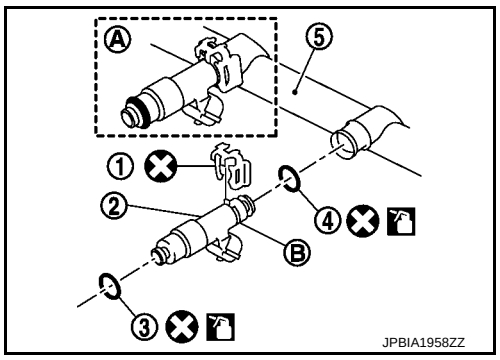

3 : O-ring (green)
4 : O-ring (black)
A : Installed condition
B : Clip mounting groove

b. Remove fuel injector (2) from fuel tube (5) by pulling straight.
CAUTION:
- **Be careful with remaining fuel that may go out from fuel tube.**
- **Be careful not to damage injector nozzle during removal.**
- **Never bump or drop fuel injector.**
- **Never disassemble fuel injector.**

10. Remove fuel damper from fuel tube.

INSTALLATION

CAUTION:
Do not reuse O-rings.

1. Install fuel damper as follows:

a. Install new O-ring (2) to fuel tube (1) as shown. When handling new O-ring, be careful of the following caution:
CAUTION:
- **Do not reuse O-rings.**
- **Handle O-ring with bare hands. Never wear gloves.**
- **Lubricate O-ring with new engine oil.**
- **Never clean O-ring with solvent.**
- **Check that O-ring and its mating part are free of foreign material.**
- **When installing O-ring, be careful not to scratch it with tool or fingernails. Also be careful not to twist or stretch O-ring. If O-ring was stretched while it was being attached, never insert it quickly into fuel tube.**
- **Insert new O-ring straight into fuel tube. Never twist it.**

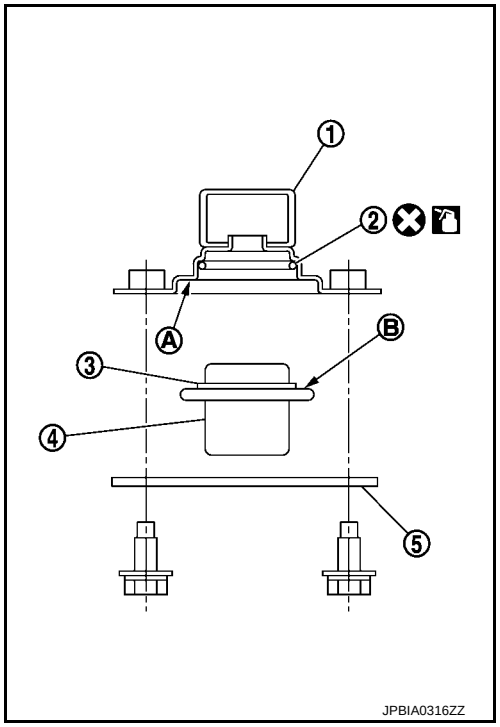

b. Install spacer (3) to fuel damper (4).

c. Insert fuel damper straight into fuel tube.
CAUTION:
- **Insert straight, checking that the axis is lined up.**
- **Never pressure-fit with excessive force.**

Reference value : 130 N (13.3 kg, 29.2 lb)

- **Insert fuel damper until (B) is touching (A) of fuel tube.**

d. Tighten bolts evenly in turn.
- After tightening bolts, check that there is no gap between fuel damper cap (5) and fuel tube.

2. Install new O-rings to fuel injector paying attention to the following.

cardiagn.com

CAUTION:
- **Do not reuse O-rings.**
- **Upper and lower O-ring are different. Be careful not to confuse them.**

Fuel tube side : Black
Nozzle side : Green

- **Handle O-ring with bare hands. Never wear gloves.**
- **Lubricate O-ring with new engine oil.**
- **Never clean O-ring with solvent.**
- **Check that O-ring and its mating part are free of foreign material.**
- **When installing O-ring, be careful not to scratch it with tool or fingernails. Also be careful not to twist or stretch O-ring. If O-ring was stretched while it was being attached, never insert it quickly into fuel tube.**
- **Insert O-ring straight into fuel injector. Never decenter or twist it.**

3. Install fuel injector to fuel tube as follows:

a. Insert clip (3) into clip mounting groove (F) on fuel injector (5).

2 : O-ring (black)
4 : O-ring (green)

- Insert clip so that protrusion (E) of fuel injector matches cutout (C) of clip.

CAUTION:
- **Never reuse clip. Replace it with new one.**
- **Be careful to keep clip from interfering with O-ring. If interference occurs, replace O-ring.**

b. Insert fuel injector into fuel tube (1) with clip attached.
- Insert it while matching it to the axial center.
- Insert fuel injector so that protrusion (A) of fuel tube matches cutout (B) of clip.
- Check that fuel tube flange (G) is securely fixed in flange fixing groove (D) on clip.

c. Check that installation is complete by checking that fuel injector does not rotate or come off.
- Check that protrusions of fuel injectors and fuel tubes are aligned with cutouts of clips after installation.

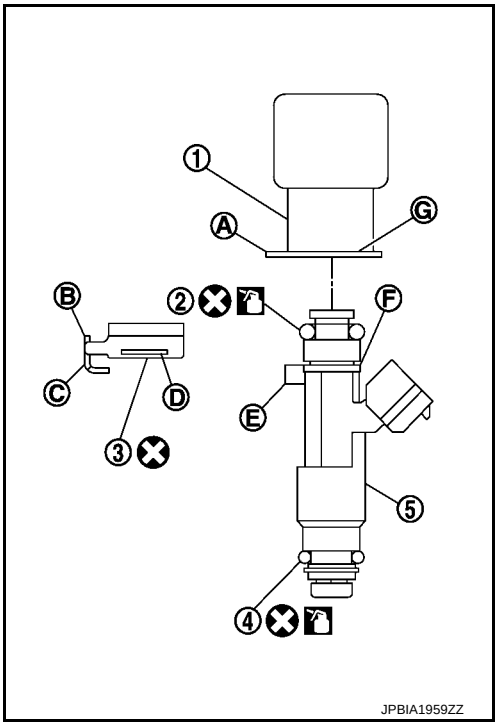

4. Install fuel tube and fuel injector assembly to intake manifold.

CAUTION:
Be careful not to let tip of injector nozzle come in contact with other parts.
- Tighten mounting bolts in two steps in numerical order as shown in the figure.

⇦ : Engine front

1st step : 10.1 N·m (1.0 kg-m, 7 ft-lb)
2nd step : 22.0 N·m (2.2 kg-m, 16 ft-lb)

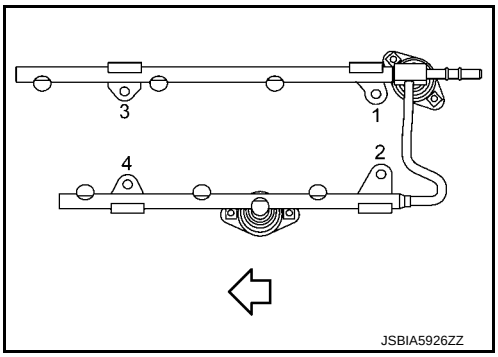

5. Connect fuel injector harness.
6. Install intake manifold collector. Refer to EM-29, "Exploded View".
7. Connect quick connector between fuel feed hose and fuel tube connection with the following procedure:

cardiagn.com

a. Check no foreign substances are deposited in and around fuel tube and quick connector, and no damage on them.

b. Thinly apply new engine oil around fuel tube from tip end to spool end.

c. Align center to insert quick connector straightly into fuel tube.
   - Insert quick connector (1) to fuel tube until top spool (2) is completely inside quick connector, and 2nd level spool (3) exposes right below quick connector.

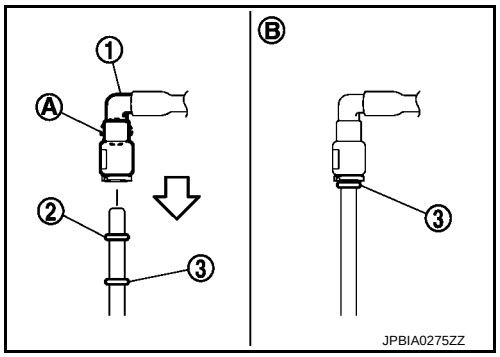

B : Fitted condition

⇦ : Upright insertion

CAUTION:
- **Hold (A) position as shown in the figure when inserting fuel tube into quick connector.**
- **Carefully align center to avoid inclined insertion to prevent damage to O-ring inside quick connector.**
- **Insert until you hear a "click" sound and actually feel the engagement.**
- **To avoid misidentification of engagement with a similar sound, be sure to perform the next step.**

d. Pull quick connector by hand holding position. Check it is completely engaged (connected) so that it does not come out from fuel tube.

e. Install quick connector cap (3) to quick connector.

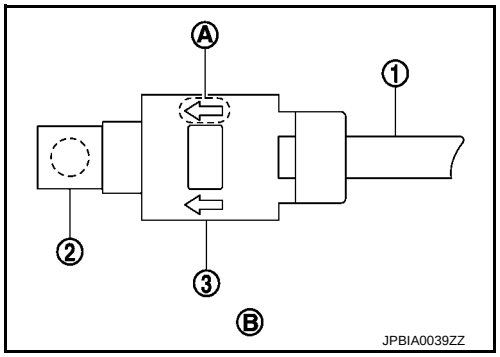

1 : Fuel feed hose

2 : Fuel tube

B : Upper view

- Install quick connector cap with arrow (A) on surface facing in direction of quick connector (fuel feed hose side).

CAUTION:
If quick connector cap cannot be installed smoothly, quick connector may have not been installed correctly. Check connection again.

f. Secure fuel feed hose to clamp of quick connector cap.

8. Install in the reverse order of removal after this step.

Inspection

INFOID:0000000012409882

INSPECTION AFTER INSTALLATION

Check on Fuel Leakage

1. Turn ignition switch "ON" (with the engine stopped). With fuel pressure applied to fuel piping, check there are no fuel leakage at connection points.
   NOTE:
   Use mirrors for checking at points out of clear sight.
2. Start the engine. With engine speed increased, check again that there are no fuel leakage at connection points.
   CAUTION:
   Never touch the engine immediately after stopped, as the engine becomes extremely hot.

cardiagn.com

IGNITION COIL, SPARK PLUG AND ROCKER COVER

Exploded View

INFOID:0000000012409883

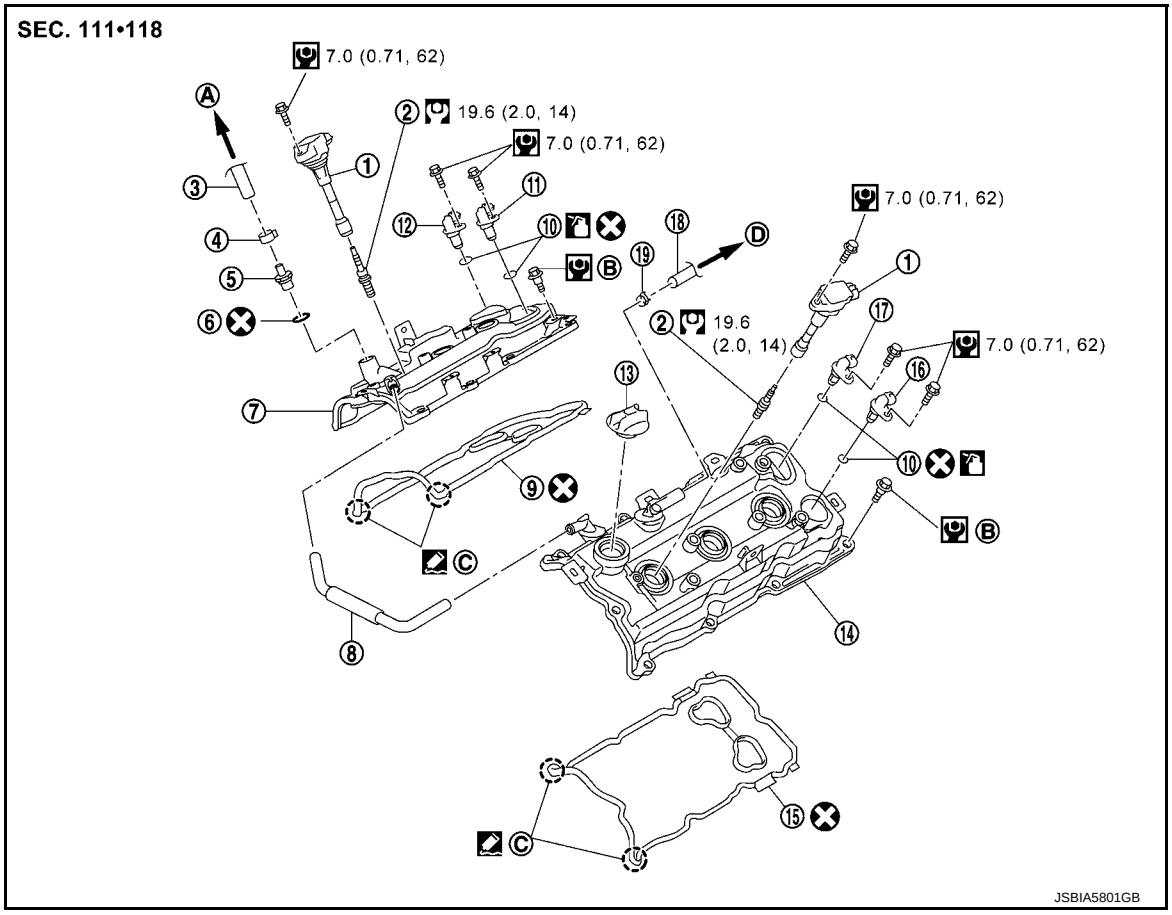

1.	Ignition coil	2.	Spark plug	3.	PCV hose
4.	Clamp	5.	PCV valve	6.	O-ring
7.	Rocker cover (bank 1)	8.	PCV hose	9.	Rocker cover gasket (bank 1)
10.	O-ring	11.	Camshaft position sensor (PHASE) (bank 1)	12.	Exhaust valve timing control position sensor (bank 1)
13.	Oil filler cap	14.	Rocker cover (bank 2)	15.	Rocker cover gasket (bank 2)
16.	Exhaust valve timing control position sensor (bank 2)	17.	Camshaft position sensor (PHASE) (bank 2)	18.	PCV hose
19	Clamp				
A.	To intake manifold collector	B.	Comply with the assembly procedure when tightening. Refer to EM-54	C.	Camshaft bracket side
D.	To air duct assembly				

: Always replace after every disassembly.

: N·m (kg-m, ft-lb)

: N·m (kg-m, in-lb)

: Should be lubricated with oil.

: Sealing point

Removal and Installation

INFOID:0000000012409884

REMOVAL

cardiagn.com

1. Remove the following parts:
   - Engine cover: Refer to EM-25, "Exploded View".
   - Air cleaner cases (upper and lower) and air duct assembly: Refer to EM-27, "Exploded View".
   - Intake manifold collector: Refer to EM-29, "Exploded View".
2. Disconnect PCV hose from rocker cover.
3. Remove camshaft position sensor (PHASE) and exhaust valve timing control position sensor. (bank 1 and bank 2).

   A : Keep off any magnetic materials

   CAUTION:
   - **Handle carefully to avoid dropping and shocks.**
   - **Never disassemble**
   - **Never allow metal powder to adhere to magnetic part at sensor tip.**
   - **Never place sensors in a location where they are exposed to magnetism.**

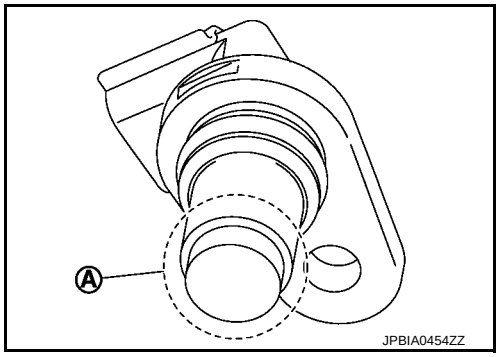

4. Remove PCV valve and O-ring from rocker cover, if necessary.
5. Remove oil filler cap from rocker cover, if necessary.
6. Remove ignition coil.
   CAUTION:
   Never shock ignition coil.
7. Remove harness clips on the rocker cover.
8. Loosen bolts in the reverse order shown in the figure.

   ⇦ : Engine front

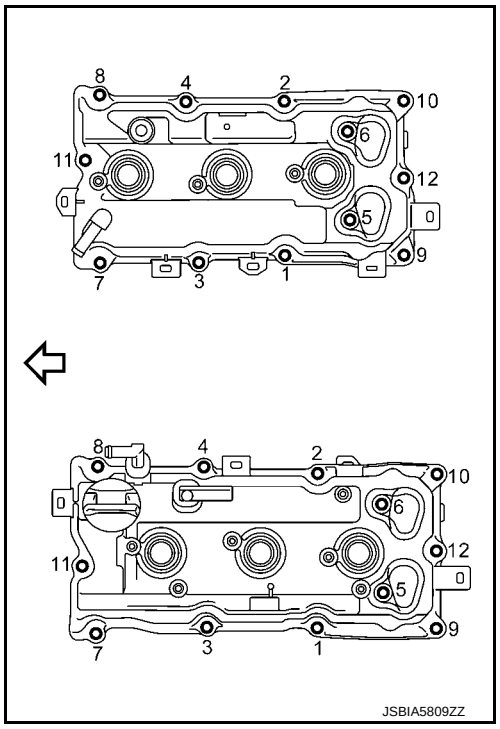

9. Remove rocker cover gasket from rocker cover.
10. Use scraper to remove all traces of liquid gasket from cylinder head and camshaft bracket (No. 1).
    CAUTION:
    Never scratch or damage the mating surface when cleaning off old liquid gasket.

INSTALLATION

CAUTION:
Do not reuse O-rings.

cardiagn.com

1. Apply liquid gasket to the position shown in the figure with the following procedure:

   A : Liquid gasket application point
   F : View F
   I : End surface of camshaft bracket (No. 1)
   b : 4 mm (0.16 in)
   c : ϕ2.5 - 3.5 mm (0.098 - 0.138 in)
   d : 5 mm (0.20 in)
   g : 10 mm (0.39 in)
   ⇦ : Engine front

   Use Genuine RTV silicone sealant or equivalent. Refer toGI-22, "Recommended Chemical Products and Sealants".

a. Refer to figure (E) to apply liquid gasket to joint part of camshaft bracket (No. 1) (1) and cylinder head.
b. Refer to figure (H) to apply liquid gasket in 90 degrees to figure.

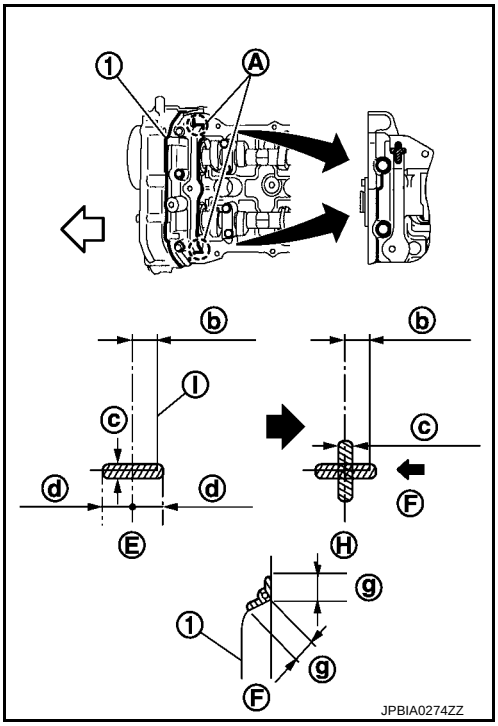

2. Install rocker cover gasket to rocker cover.
3. Install rocker cover.
   • Check if rocker cover gasket is not dropped from the installation groove of rocker cover.

4. Tighten bolts in two steps separately in numerical order as shown in the figure.

   ⇦ : Engine front

   1st step : 1.96 N·m (0.20 kg-m, 17 in-lb)
   2nd step : 8.33 N·m (0.85 kg-m, 74 in-lb)

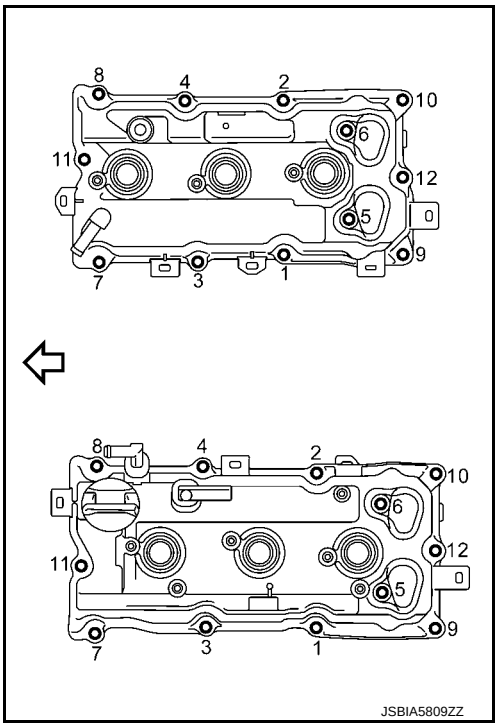

5. Install in the reverse order of removal after this step.

cardiagn.com

UNIT REMOVAL AND INSTALLATION

ENGINE ASSEMBLY

Exploded View

INFOID:0000000012409885

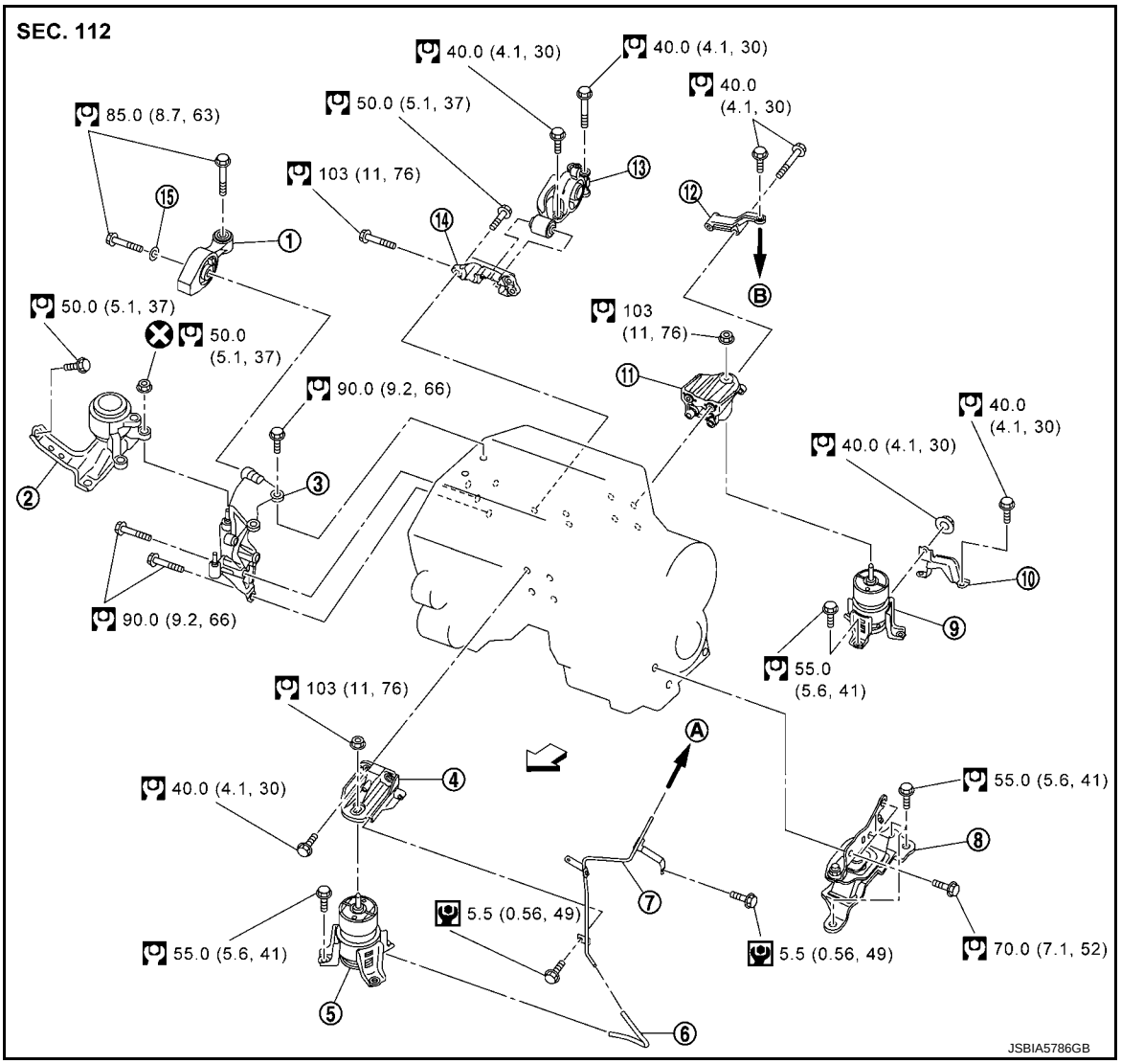

1.	Upper torque rod	2.	Engine mounting insulator (RH)	3.	Engine mounting bracket (RH)
4.	Engine mounting bracket (front)	5.	Engine mounting insulator (front)	6.	Vacuum hose
7.	Vacuum tube (front)	8.	Engine mounting insulator (LH)	9.	Engine mounting insulator (rear)
10.	Engine mounting stay (rear)	11.	Engine mounting bracket (rear)	12.	Gusset
13.	Rear torque rod	14.	Rear torque rod bracket	15.	Washer
A.	To electronic controlled engine mount control solenoid valve	B.	To transaxle		

⇦ : Vehicle front

⊗ : Always replace after every disassembly.

: N·m (kg-m, ft-lb)

: N·m (kg-m, in-lb)

cardiagn.com

Removal and Installation

INFOID:0000000012409886

WARNING:
- **Situate the vehicle on a flat and solid surface.**
- **Place chocks at front and back of rear wheels.**
- **For engines not equipped with engine slingers, attach proper slingers and bolts described in PARTS CATALOG.**

CAUTION:
- **Always be careful to work safely, avoid forceful or uninstructed operations.**
- **Never start working until exhaust system and engine coolant are cool enough.**
- **If items or work required are not covered by the engine section, refer to the applicable sections.**
- **Always use the support point specified for lifting.**
- **Use either 2-pole lift type or separate type lift as best you can. If board-on type is used for unavoidable reasons, support at the rear axle jacking point with transmission jack or similar tool before starting work, in preparation for the backward shift of center of gravity.**
- **For supporting points for lifting and jacking point at rear axle, refer to GI-29, "Garage Jack and Safety Stand and 2-Pole Lift".**

NOTE:
When removing components such as hoses, tubes/lines, etc., cap or plug openings to prevent fluid from spilling.

REMOVAL

Outline

At first, remove the engine and the transaxle assembly with front suspension member downward. Then separate the engine and the transaxle.

Preparation

1. Release fuel pressure. Refer to EC-153, "Work Procedure".
2. Drain engine coolant. Refer to CO-9, "Draining".
   CAUTION:
   - **Perform this step when the engine is cold.**
   - **Never spill engine coolant on drive belt.**
3. Remove the following parts:
   - Engine cover: Refer to EM-25, "Removal and Installation".
   - Engine under cover.
   - Front road wheel and tires
   - Splash guards (RH and LH): Refer to EXT-23, "Exploded View".
   - Air duct (inlet), air cleaner cases (upper and lower) with mass air flow sensor and air duct assembly: Refer to EM-27, "Exploded View".
   - Battery and battery tray: Refer to PG-136, "Exploded View".
   - Reservoir tank of radiator: Refer to CO-14, "Removal and Installation".
   - Front wiper arm and extension cowl top: Refer to EXT-21, "Exploded View".
4. Disconnect engine room harness at the TCM, ECM, and other sides.
   CAUTION:
   To keep clean harness connector and avoid damage and foreign materials, cover them completely with plastic bags or something similar.
5. Remove battery bracket with ECM and TCM.

Engine Room

1. Disconnect heater hoses at engine side. Refer to CO-27, "Exploded View".
   - Install plug to avoid leakage of engine coolant.
2. Remove EVAP hose. Refer to EM-29, "Exploded View".
3. Remove fuel feed hose at engine side. Refer to EM-49, "Exploded View".
   - Install plug to avoid leakage of fuel.
4. Disconnect transaxle shift control cable from transaxle. Refer to TM-190, "Removal and Installation".
5. Disconnect brake booster vacuum hose. Refer to EM-29, "Exploded View".
6. Remove radiator hose (upper and lower) at engine side. Refer to CO-14, "Removal and Installation".
7. Remove return hose and high pressure piping from the power steering oil pump assembly.

cardiagn.com

CAUTION:
Fit plugs onto disconnected hoses to prevent fuel leakage.

8. Disconnect ground cable.
9. Remove A/C compressor with piping connected, and temporarily secure it to aside. Refer to HA-31, "COMPRESSOR : Removal and Installation".
10. Disconnect CVT fluid cooler hoses from radiator. Refer to CO-14, "Exploded View".

Vehicle Underbody

1. Remove oil filter. Refer to LU-11, "Removal and Installation".
2. Remove oil cooler. Refer to LU-12, "Removal and Installation".
3. Remove exhaust front tube. Refer to EX-5, "Exploded View".
4. Remove heat insulator. Refer to ST-20, "Exploded View".
5. Disconnect steering lower joint at power steering gear assembly side, and release steering lower shaft. Refer to ST-20, "Exploded View".
6. Disconnect front stabilizer connecting rod. Refer to FSU-15, "Exploded View".
7. Remove front wheel sensor (RH and LH) for ABS from steering knuckle. Refer to BRC-135, "FRONT WHEEL SENSOR : Removal and Installation".
8. Remove front brake caliper assembly with piping connected, and temporarily secure it to aside for vehicle side. Refer to BR-39, "BRAKE CALIPER ASSEMBLY : Exploded View".
9. Remove the connector of auto levelizer control unit and clip. Refer to EXL-91, "Exploded View".
10. Remove strut assembly and steering knuckle fixing nuts and bolts. Refer to FSU-9, "Removal and Installation" and FSU-17, "Exploded View".
11. Remove front drive shaft. (LH and RH). Refer to FAX-17, "Exploded View".
12. Disconnect power steering piping at a vehicle side. Refer to ST-35, "Exploded View".
    - Install plug to avoid leakage of power steering fluid.
13. Remove rear plate cover from oil pan. Refer to EM-39, "Exploded View".
14. Remove bolts fixing drive plate to torque converter. Refer to TM-219, "Exploded View".
15. Remove bolts tightening oil pan and transaxle. Refer to EM-39, "Exploded View".
16. Remove crankshaft position sensor (POS). Refer to EM-39, "Exploded View".
    CAUTION:
    - **Handle carefully to avoid dropping and shocks.**
    - **Never disassemble.**
    - **Never allow metal powder to adhere to magnetic part at sensor tip.**
    - **Never place sensors in a location where they are exposed to magnetism.**

Removal

1. Use a manual lift table caddy (commercial service tool) or equivalently rigid tool such as a transmission jack. Securely support bottom of front suspension member.
   CAUTION:
   Put a piece of wood or something similar as the supporting surface, secure a completely stable condition.

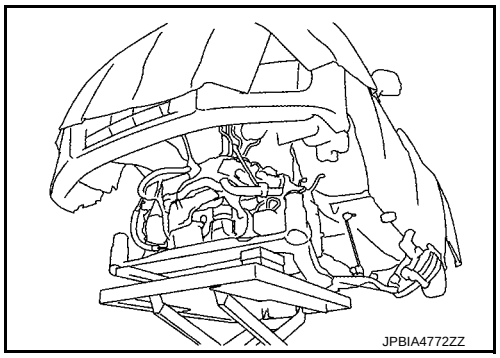

2. Remove upper torque rod mounting bolt on the engine side and engine mount insulator (RH) mounting nut on the engine side.
3. Remove mounting bolt between transverse link and front suspension member with power tool. Refer to FSU-17, "Exploded View".
4. Remove front suspension member mounting nuts and bolts. Refer to FSU-17, "Exploded View".
5. Carefully lower jack, or raise lift to remove the engine and the transaxle assembly and front suspension member. When performing work, observe the following caution:
   CAUTION:

cardiagn.com

- **Confirm there is no interference with the vehicle.**
- **Check all connection points have been disconnected.**
- **Keep in mind the center of vehicle gravity changes. If necessary, use jack(s) to support the vehicle at rear jacking point(s) to prevent it from falling it off the lift.**

Separation

1. Install engine slingers into front of cylinder head (bank 1) (3) and rear of cylinder head (bank 2) (2).

   1 : Engine rear slinger
   4 : Engine front slinger (upper)
   5 : Engine front slinger (lower)
   ⇦ : Engine front

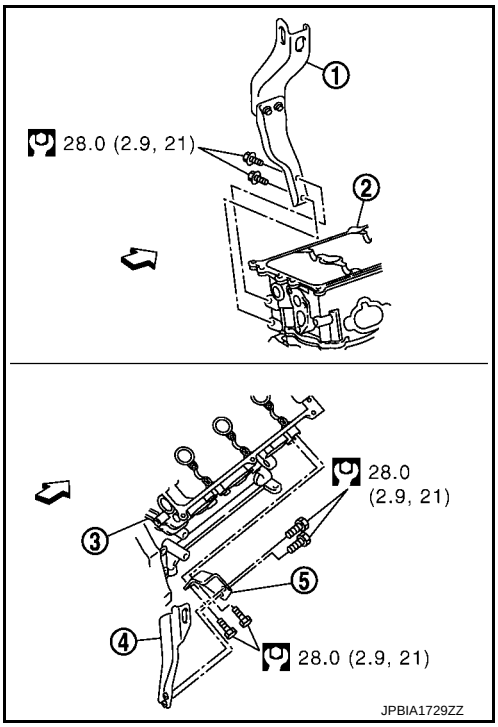

2. Remove vacuum tube (front) and rear vacuum tube (upper and lower).
3. Lift with hoist the engine and the transaxle assembly and front suspension member.
   CAUTION:
   - **Before and during this lifting, always check if any harnesses are left connected.**
   - **Avoid damage to and oil/grease smearing or spills onto engine mounting insulator.**
4. Remove rear torque rod and rear torque rod bracket.
5. Remove each engine mounting insulator and each engine mounting bracket from engine.
6. Lift with hoist and separate the engine and the transmission assembly from front suspension member.
7. Remove starter motor. Refer to STR-19, "Removal and Installation".
8. Separate engine and transaxle assembly. Refer to TM-215, "Removal and Installation".

INSTALLATION

Note the following, and install in the reverse order of removal.

CAUTION:

- **Never allow engine mounting insulator to be damage and careful no oil gets on it.**
- **Check all mounting insulators are seated properly, then tighten mounting nuts and bolts.**
- **Do not reuse washers.**

Preparation

1. Install the engine mounting bracket (RH) to the engine as follows:

cardiagn.com

a. Tighten the bolt No. 7 as shown in the figure. (temporarily)

⇦ : Vehicle front

b. Tighten the bolts in numerical order as shown in the figure. (specified torque)

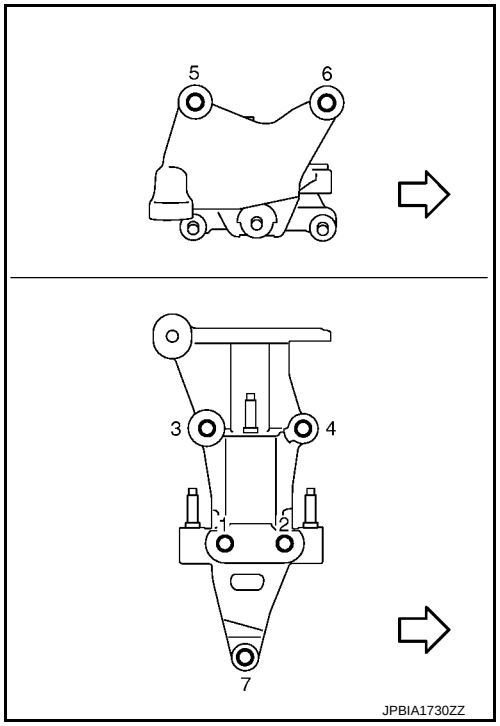

2. Install the engine mounting bracket (front) to the engine as follows:

a. Tighten the bolt No. 4 as shown in the figure. (temporarily)

⇦ : Engine front

b. Tighten the bolts in numerical order as shown in the figure. (specified torque)

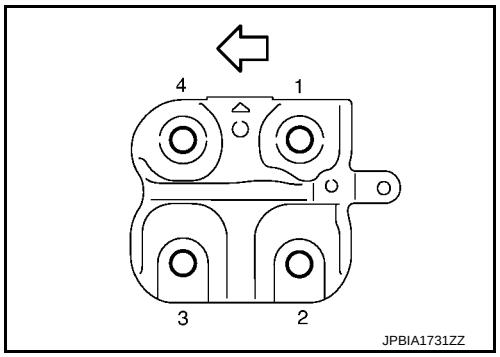

3. Install the engine mounting bracket (rear) and gusset to the engine as follows:

a. Tighten the bolt No. 4 as shown in the figure. (temporarily)

⇦ : Engine front

b. Tighten the bolts in numerical order as shown in the figure. (specified torque)

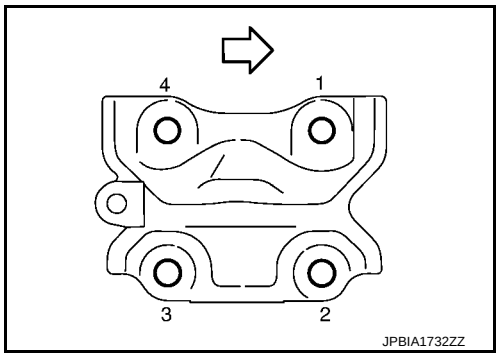

4. Install the rear torque rod bracket to the engine as follows:

cardiagn.com

a. Tighten the bolt No. 3 as shown in the figure. (temporarily)

⇦ : Engine front

b. Tighten the bolts in numerical order as shown in the figure. (specified torque)

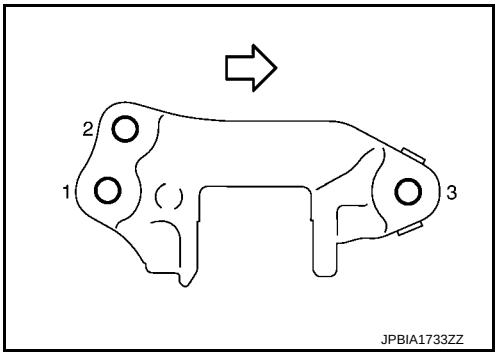

5. Install the engine mounting insulator (LH) to the transaxle as follows:

a. Tighten the bolt No. 3 as shown in the figure. (temporarily)

⇦ : Vehicle front

b. Tighten the bolts in numerical order as shown in the figure. (specified torque)

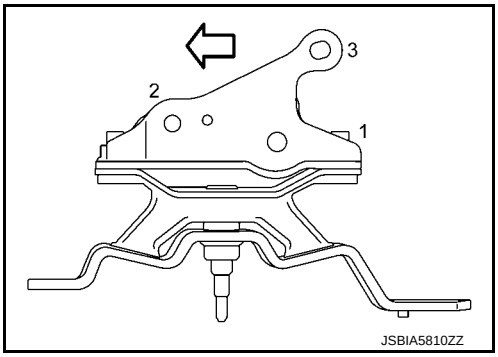

6. Install the engine mounting insulator (front) to the front suspension member as follows:

a. Tighten the bolt No. 3 as shown in the figure. (temporarily)

⇦ : Vehicle front

b. Tighten the bolts in numerical order as shown in the figure. (specified torque)

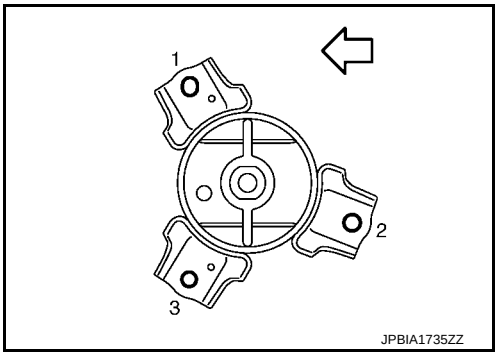

7. Install the engine mounting insulator (rear) to the front suspension member as follows:
   1. Tighten the bolt No. 3 as shown in the figure. (temporarily)

   ⇦ : Vehicle front

   2. Tighten the bolts No.1, 2, 3 in numerical order as shown in the figure. (specified torque)
   3. Tighten the bolt No. 6 as shown in the figure. (temporarily)
   4. Tighten the bolts No. 4, 5, 6 in numerical order as shown in the figure. (specified torque)

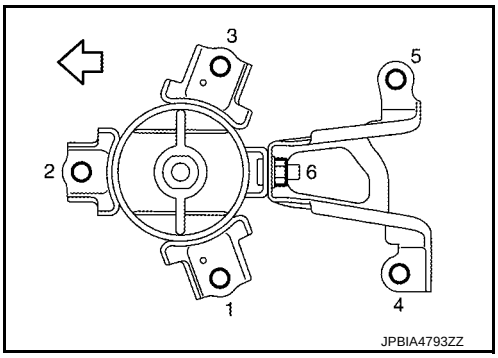

8. Install the rear torque rod to the front suspension member as follows:

cardiagn.com

a. Tighten the bolt No. 3 as shown in the figure. (temporarily)

⇦ : Vehicle front

b. Tighten the bolts in numerical order as shown in the figure. (specified torque)

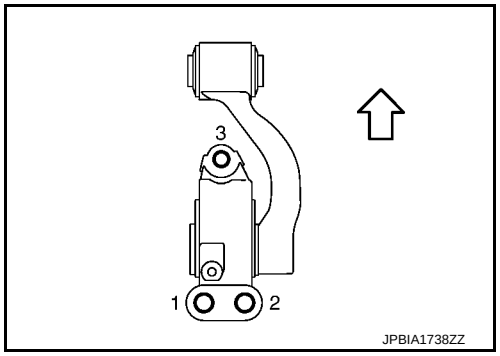

9. Install the engine mounting brackets (front) to the engine mounting insulators (front).
10. Install engine mounting bracket (rear) to engine mounting insulator (rear).
11. Install the engine mounting insulator (LH) to the front suspension member.
    - Tighten the bolts in numerical order as shown in the figure.

⇦ : Vehicle front

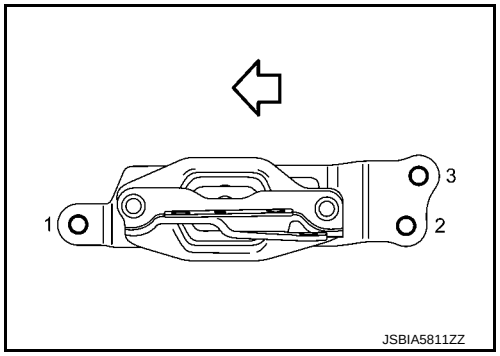

12. Install the rear torque rod to the rear torque rod bracket.
13. Install the vacuum tube (front) as follows:

a. Tighten the bolt No. 3 as shown in the figure. (temporarily)

⇦ : Engine front

b. Tighten the bolts in numerical order as shown in the figure. (specified torque)

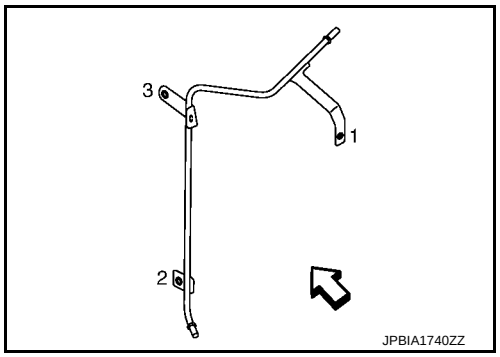

Installation

1. Install the engine mounting insulator (RH) as follows:

a. Tighten the bolt No. 1 as shown in the figure. (temporarily)

⇦ : Vehicle front

b. Tighten the bolts No. 2, 3 in numerical order as shown in the figure. (specified torque)
c. Tighten the bolt No. 1 as shown in the figure. (specified torque)
d. Tighten the bolts No. 4, 5, 6 in numerical order as shown in the figure. (specified torque)

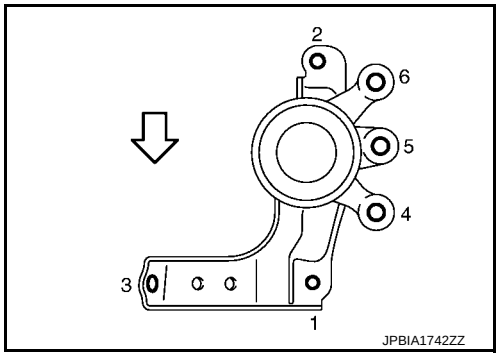

2. Install the upper torque rod as follows:

cardiagn.com

a. Tighten the bolt No. 2 as shown in the figure. (temporarily)

⇦ : Vehicle front

b. Tighten the bolts in numerical order as shown in the figure. (specified torque)

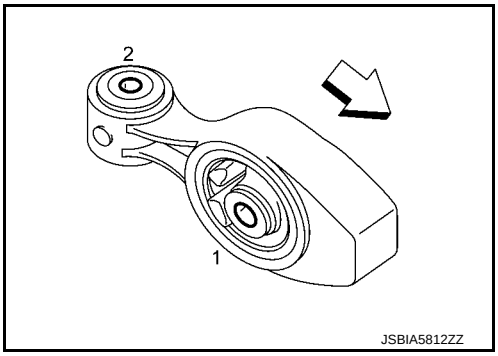

Inspection

INFOID:0000000012409887

INSPECTION AFTER INSTALLATION

Inspection for Leakage

The following are procedures for checking fluids leakage, lubricates leakage, and exhaust gases leakage.

- Before starting engine, check oil/fluid levels including engine coolant and engine oil. If less than required quantity, fill to the specified level. Refer to MA-10, "Fluids and Lubricants".
- Use procedure below to check for fuel leakage.
  - Turn ignition switch “ON” (with engine stopped). With fuel pressure applied to fuel piping, check for fuel leakage at connection points.
  - Start engine. With engine speed increased, check again for fuel leakage at connection points.
- Run engine to check for unusual noise and vibration.
- Warm up engine thoroughly to check there is no leakage of fuel, exhaust gases, or any oil/fluids including engine oil and engine coolant.
- Bleed air from lines and hoses of applicable lines, such as in cooling system.
- After cooling down engine, again check oil/fluid levels including engine oil and engine coolant. Refill to the specified level, if necessary.

Summary of the inspection items:

Items		Before starting engine	Engine running	After engine stopped
Engine coolant		Level	Leakage	Level
Engine oil		Level	Leakage	Level
Transmission / transaxle fluid	AT & CVT Models	Leakage	Level / Leakage	Leakage
	MT Models	Level / Leakage	Leakage	Level / Leakage
Other oils and fluids*		Level	Leakage	Level
Fuel		Leakage	Leakage	Leakage
Exhaust gases		—	Leakage	—

*: Power steering fluid, brake fluid, etc.

cardiagn.com

UNIT DISASSEMBLY AND ASSEMBLY

ENGINE STAND SETTING

Setting

INFOID:0000000012409888

NOTE:
Explained here is how to disassemble with engine stand supporting transaxle surface. When using different type of engine stand, note with difference in steps and etc.

1. Remove the engine assembly from the vehicle. Refer to EM-57, "Exploded View" .
2. Remove the parts that may restrict installation of engine to widely use engine stand.
   NOTE:
   The procedure is described assuming that you use a widely use engine stand holding the surface, to which transaxle is installed.
   - Remove drive plate. Fix crankshaft pulley with the pulley holder (commercial service tool), and remove mounting bolts.
   - Loosen mounting bolts in diagonal order.
   - Check for deformation or damage drive plate.
     CAUTION:
     - **Never disassemble drive plate.**
     - **Never place drive plate with signal plate facing down.**
     - **When handling signal plate, take care not to damage or scratch it.**
     - **Handle signal plate in a manner that prevents it from becoming magnetized.**
3. Remove pilot converter using the pilot bushing puller (SST) if necessary.

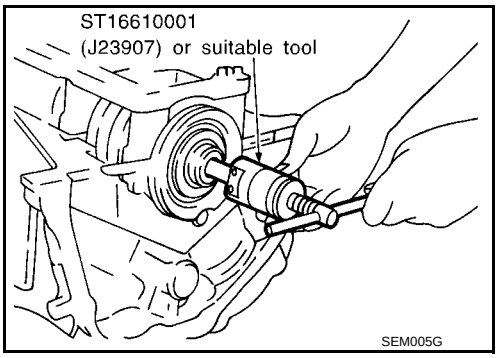

4. Lift the engine with hoist to install it onto the widely use engine stand.
   CAUTION:
   Use an engine stand that has a load capacity [220 kg (485 lb) or more] large enough for supporting the engine weight.
   - If the load capacity of the stand is not adequate, remove the following parts beforehand to reduce the potential risk of overturning the stand.
   - Remove intake manifold collector. Refer to EM-29, "Exploded View".
   - Remove intake manifold. Refer to EM-32, "Exploded View".
   - Remove fuel injector and fuel tube assembly. Refer to EM-49, "Exploded View".
   - Remove ignition coil. Refer to EM-54, "Exploded View".
   - Remove rocker cover. Refer to EM-54, "Exploded View".
   - Remove exhaust manifold. Refer to EM-34, "Exploded View".
   - Other removable brackets.
     NOTE:

cardiagn.com

The figure shows an example of widely use engine stand (A) that can hold mating surface of transaxle with drive plate removed.

CAUTION:

Before removing the hanging chains, check the engine stand is stable and there is no risk of overturning.

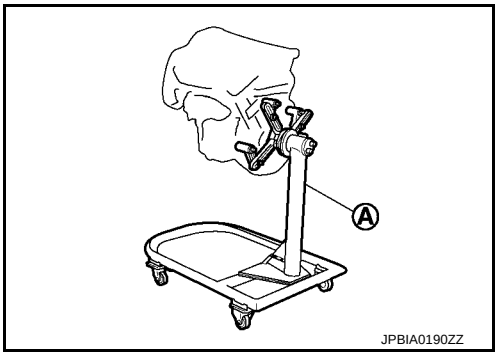

5. Drain engine oil. Refer to LU-9, "Draining".
6. Drain engine coolant by removing water drain plugs (A) and (B) from cylinder block both sides as shown in the figure.

C : Plug

D : Connector bolt

Tightening torque : Refer to EM-109, "Disassembly and Assembly".

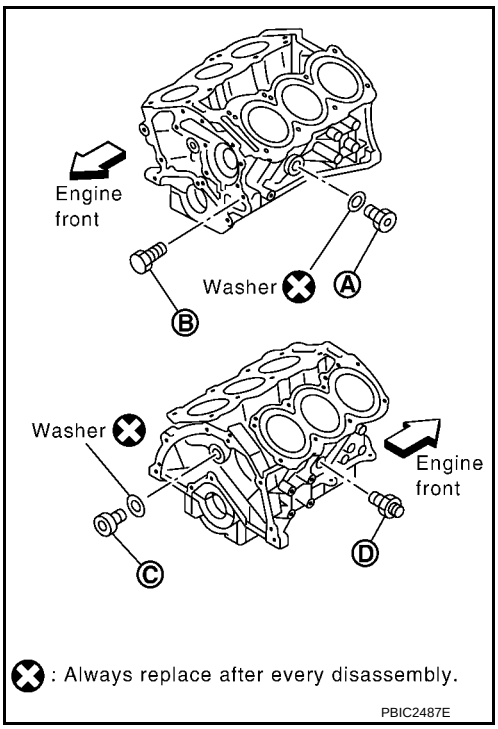

cardiagn.com

ENGINE UNIT

Disassembly

INFOID:0000000012409889

1. Remove drive belt. Refer toEM-26, "Removal and Installation"
2. Remove intake manifold collector. Refer to EM-29, "Exploded View".
3. Remove intake manifold. Refer to EM-32, "Exploded View".
4. Remove compressor. Refer to HA-31, "COMPRESSOR : Removal and Installation".
5. Remove alternator.CHG-26, "Removal and Installation".
6. Remove exhaust manifold. Refer to EM-34, "Exploded View".
7. Remove oil pan (lower and upper). Refer to EM-39, "Exploded View".
8. Remove ignition coil, spark plug and rocker cover. Refer to EM-54, "Exploded View".
9. Remove fuel injector and fuel tube. Refer to EM-49, "Exploded View".
10. Remove timing chain and rear timing chain case. Refer to EM-69, "Removal and Installation".
11. Remove camshaft. Refer to EM-87, "Exploded View".
12. Remove cylinder head. Refer to EM-96, "Exploded View".

Assembly

INFOID:0000000012409890

Assembly in the reverse order of disassembly.

cardiagn.com

TIMING CHAIN

Exploded View

INFOID:0000000012409891

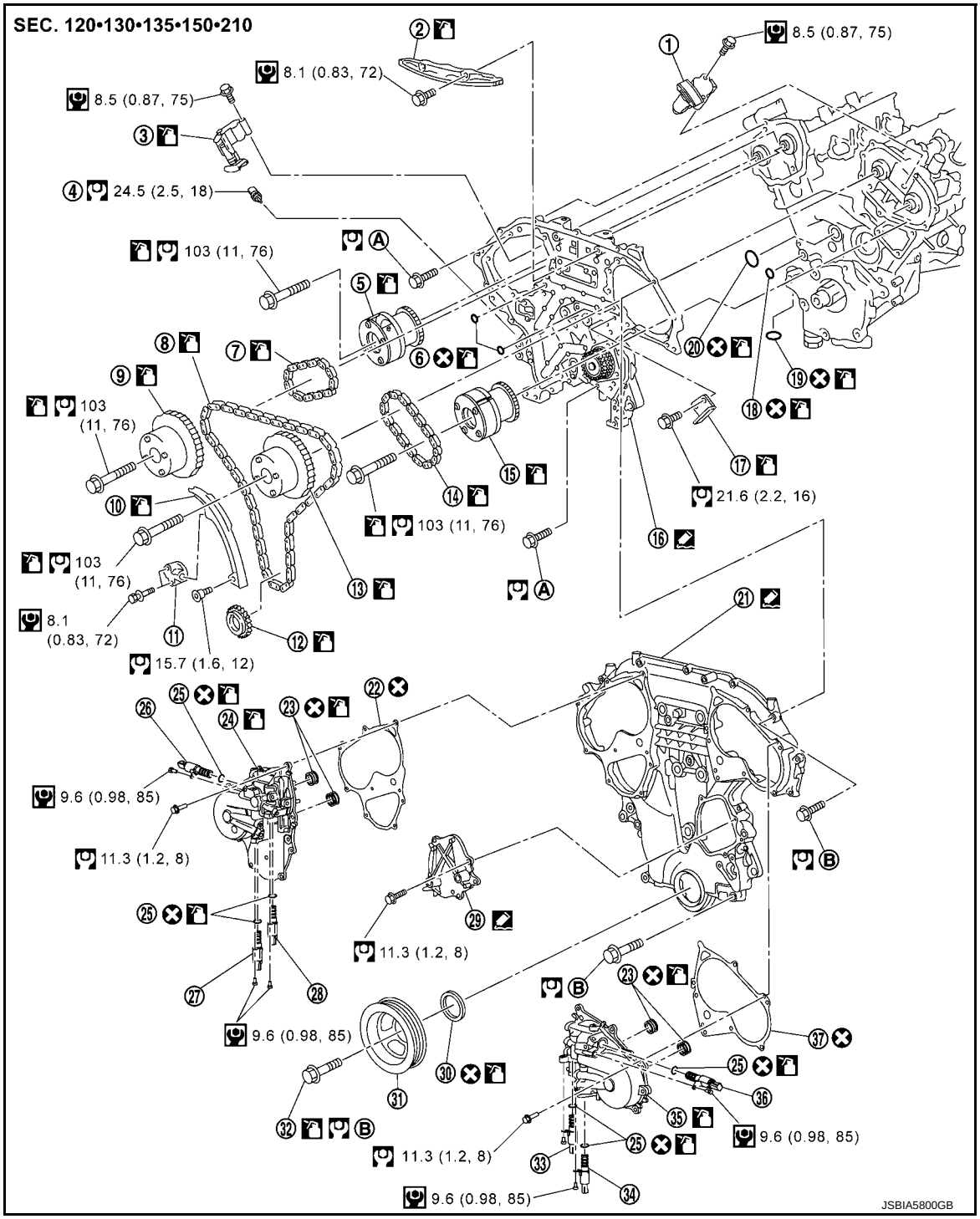

1.	Timing chain tensioner (secondary) (bank 2)	2.	Internal chain guide	3.	Timing chain tensioner (secondary) (bank 1)
4.	Oil temperature sensor	5.	Camshaft sprocket (bank 1) (EXH)	6.	O-ring
7.	Timing chain (secondary)	8.	Timing chain (primary)	9.	Camshaft sprocket (bank 1) (INT)
10.	Slack guide	11.	Timing chain tensioner (primary)	12.	Crankshaft sprocket
13.	Camshaft sprocket (bank 2) (INT)	14.	Timing chain (secondary)	15.	Camshaft sprocket (bank 2) (EXH)
16.	Rear timing chain case	17.	Tension guide	18.	O-ring

cardiagn.com

19.	O-ring	20.	O-ring	21.	Front timing chain case
22.	Camshaft sprocket cover gasket (bank 1)	23.	Seal ring	24.	Camshaft sprocket cover (bank 1)
25.	O-ring	26.	Intake valve timing intermediate lock control solenoid valve (bank 1)	27.	Exhaust valve timing control solenoid valve (bank 1)
28.	Intake valve timing control solenoid valve (bank 1)	29.	Water pump cover	30.	Front oil seal
31.	Crankshaft pulley	32.	Crankshaft pulley bolt	33.	Intake valve timing control solenoid valve (bank 2)
34.	Exhaust valve timing control solenoid valve (bank 2)	35.	Camshaft sprocket cover (bank 2)	36.	Intake valve timing intermediate lock control solenoid valve (bank 2)
37.	Camshaft sprocket cover gasket (bank 2)				
A.	Comply with the assembly procedure when tightening. Refer to EM-69	B.	Comply with the assembly procedure when tightening. Refer to EM-69		

: Always replace after every disassembly.

: N·m (kg-m, ft-lb)

: N·m (kg-m, in-lb)

: Should be lubricated with oil.

: Sealing point

Removal and Installation

INFOID:0000000012409892

REMOVAL

1. Remove the following parts:
   - Remove intake manifold collector. Refer to EM-30, "Removal and Installation".
   - Remove rocker covers (bank 1 and bank 2). Refer to EM-54, "Exploded View".
   - Remove oil pans (lower and upper) and oil strainer. Refer to EM-39, "Exploded View".
   - Remove drive belt and auto tensioner. Refer to EM-14, "Removal and Installation" and EM-26, "Exploded View".
2. Separate engine harness removing their brackets from front timing chain case.
3. Remove camshaft sprocket covers.
   - Loosen mounting bolts in the reverse order as shown in the figure.

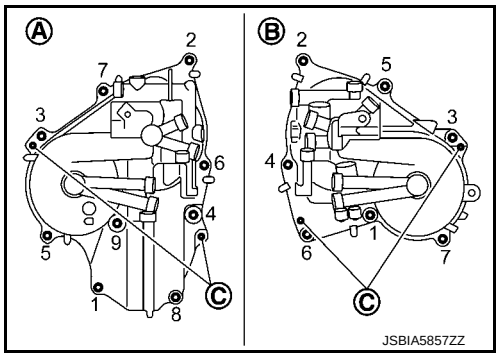

A : Bank 1
B : Bank 2
C : Dowel pin hole

CAUTION:
Shaft is internally jointed with camshaft sprocket (INT) center hole. When removing, keep it horizontal until it is completely disconnected.

4. Obtain No. 1 cylinder at TDC of its compression stroke as follows:

cardiagn.com

a. Rotate crankshaft pulley clockwise to align timing mark (grooved line without color) (⬅) with timing indicator.

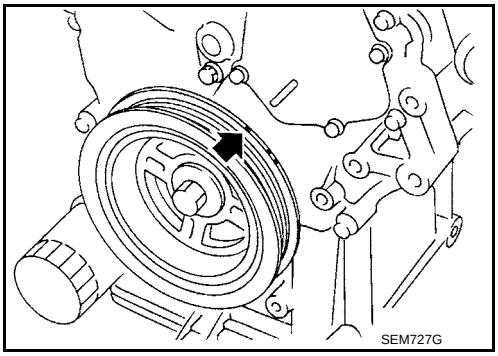

b. Check that intake and exhaust cam noses on No. 1 cylinder (engine front side of bank 1) are located as shown in the figure.

⇦ : Engine front

- If not, turn crankshaft one revolution (360 degrees) and align as shown in the figure.

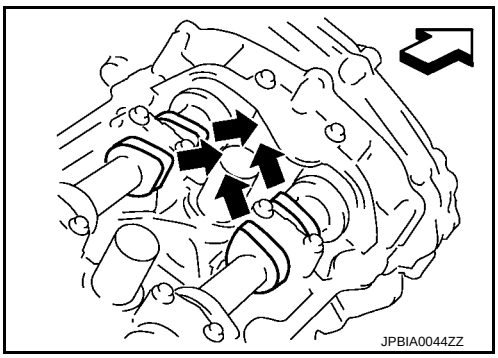

5. Remove crankshaft pulley as follows:

a. Fix crankshaft with the pulley holder (commercial service tool) (A).

1 : Crankshaft pulley

b. Loosen crankshaft pulley bolt and locate bolt seating surface at 10 mm (0.39 in) from its original position.
CAUTION:
Never remove crankshaft pulley bolt as it will be used as a supporting point for suitable puller.

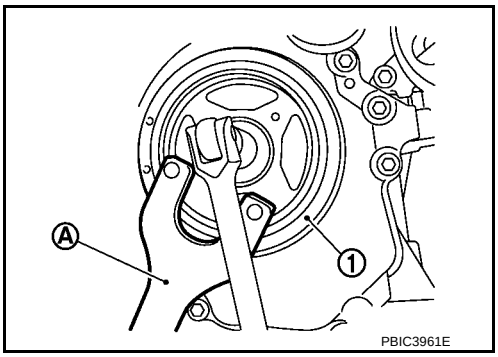

c. Place suitable puller tab on holes of crankshaft pulley, and pull crankshaft pulley through.
CAUTION:
Never put suitable puller tab on crankshaft pulley periphery, as this will damage internal damper.

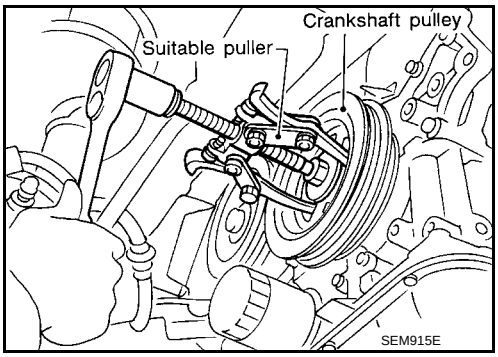

6. Remove front timing chain case as follows:

cardiagn.com

a. Loosen mounting bolts in the reverse order as shown in the figure.

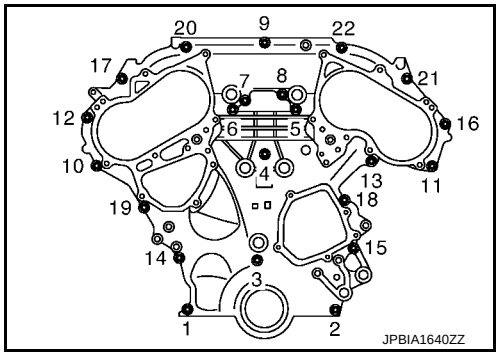

b. Insert a suitable tool (A) into the notch at the top of front timing chain case as shown in the figure.

c. Pry off case by moving the tool as shown.
- Use the seal cutter [SST: KV10111100 (J-37228)] to cut liquid gasket for removal.

CAUTION:
- **Never use screwdrivers or something similar.**
- **After removal, handle front timing chain case carefully so it does not tilt, cant, or warp under a load.**

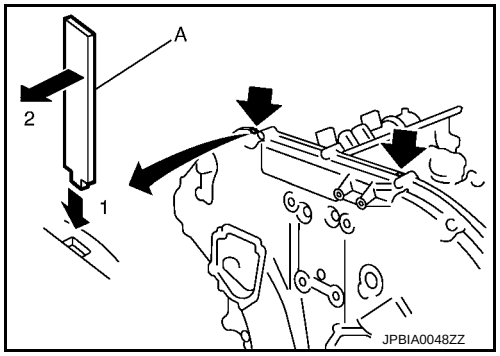

7. Remove water pump cover from front timing chain case.
- Use the seal cutter [SST: KV10111100 (J-37228)] to cut liquid gasket for removal.

8. Remove front oil seal from front timing chain case using a suitable tool.
- Use a screwdriver for removal.

CAUTION:
Be careful not to damage front timing chain case.

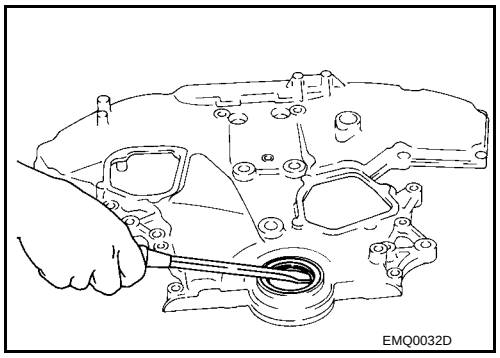

9. Remove O-ring (1) from rear timing chain case.

A : Bank 1
B : Bank 2

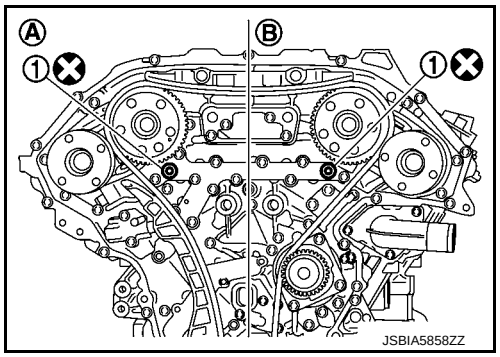

10. Remove timing chain tensioner (primary) as follows:

cardiagn.com

a. Remove lower mounting bolt (A).
b. Loosen upper mounting bolt (B) slowly, and then turn timing chain tensioner (primary) (1) on the mounting bolt so that plunger (C) is fully expanded.
NOTE:
Even if plunger is fully expanded, it is not dropped from the body of timing chain tensioner (primary).
c. Remove upper mounting bolt, and then remove timing chain tensioner (primary).

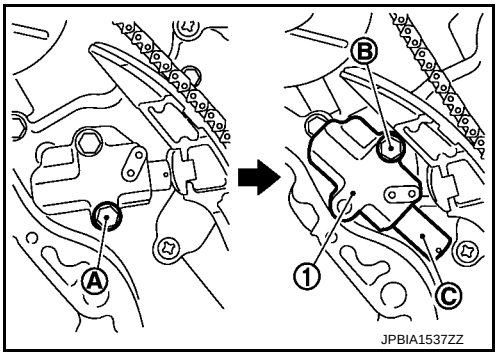

11. Remove internal chain guide, tension guide and slack guide.

① : Internal chain guide
② : Slack guide
③ : Tension guide

NOTE:
Tension guide can be removed after removing timing chain (primary).
CAUTION:
After removing timing chain (primary), never turn crankshaft and camshaft separately, or valves will strike the piston heads.

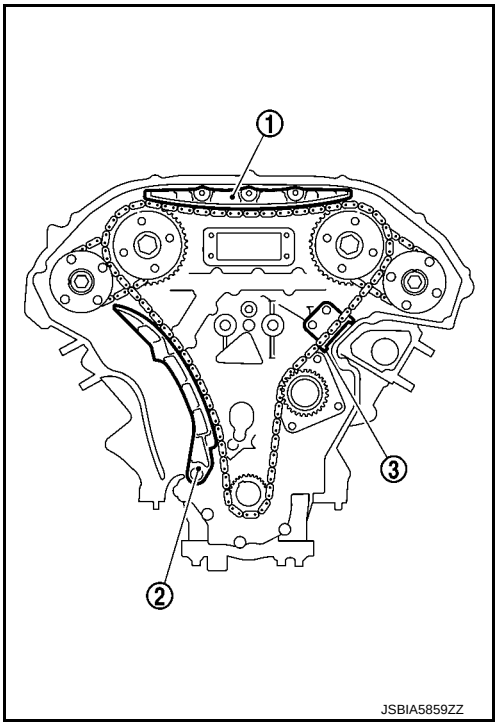

12. Remove timing chain (primary) and crankshaft sprocket.
13. Remove timing chain (secondary) and camshaft sprockets as follows:
a. Attach a suitable stopper pin (2) to the bank 1 (A) and bank 2 (B) timing chain tensioners (secondary) (1).
NOTE:
- Use approximately 0.5 mm (0.02 in) dia. hard metal pin as a stopper pin.
- For removal of timing chain tensioner (secondary), refer to EM-87, "Exploded View". [Removing camshaft bracket (No. 1) is required.]

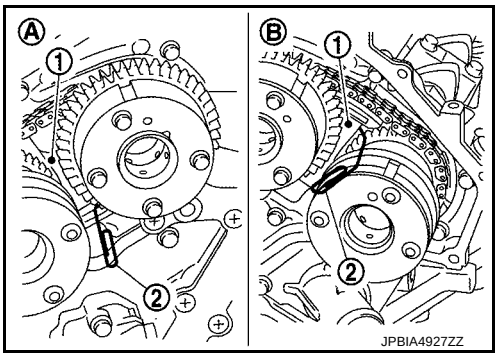

b. Remove camshaft sprockets (INT and EXH) mounting bolts.

cardiagn.com

- Secure the hexagonal portion of camshaft using a wrench to loosen mounting bolts.

CAUTION:
Never loosen mounting bolts with securing anything other than the camshaft hexagonal portion or with tensioning the timing chain.

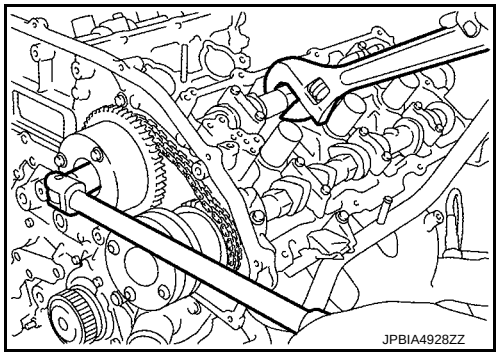

c. Remove timing chain (secondary) together with camshaft sprockets.
- Turn camshaft slightly to secure slackness of timing chain on timing chain tensioner (secondary) side.
- Insert 0.5 mm (0.020 in) thick metal or resin plate between timing chain and timing chain tensioner plunger (guide) (E). Remove timing chain (secondary) (2) together with camshaft sprockets with timing chain loose from guide groove.

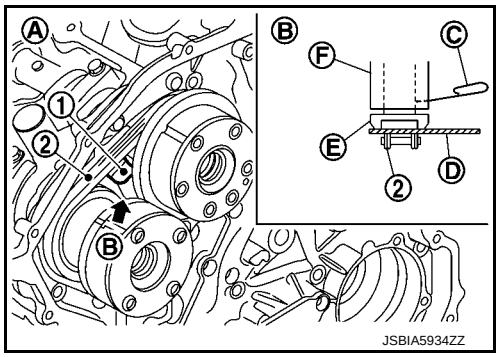

1 : Timing chain tensioner (secondary)
A : Bank 1
B : View B
C : Stopper pin
D : Plate
F : Timing chain tensioner (body)

CAUTION:
Be careful of plunger coming-off when removing timing chain (secondary). This is because plunger of timing chain tensioner (secondary) moves during operation, leading to coming-off of fixed stopper pin.
NOTE:
- Camshaft sprocket (INT and EXH) is two-for-one structure of sprockets for timing chain (primary) and for timing chain (secondary).
- Figure is shown as an example of bank 1.

- When handling camshaft sprocket (INT and EXH), be careful of the following caution:

CAUTION:
- **Handle carefully to avoid any shock to camshaft sprocket.**
- **Never disassemble. [Never loosen bolts (A) and (B) as shown in the figure].**

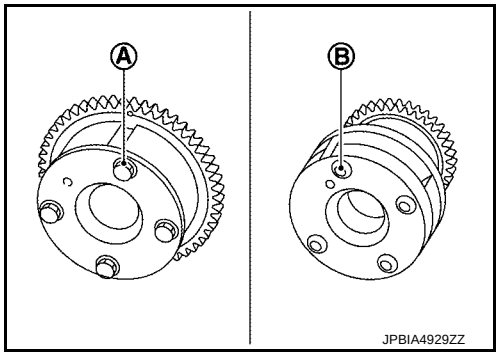

14. Remove water pump. Refer to CO-20, "Removal and Installation".
15. Remove oil pump. Refer to LU-14, "Removal and Installation".
16. Remove rear timing chain case as follows:

cardiagn.com

a. Loosen and remove mounting bolts in the reverse order as shown in the figure.

b. Cut liquid gasket using the seal cutter [SST: KV10111100 (J-37228)] and remove rear timing chain case.

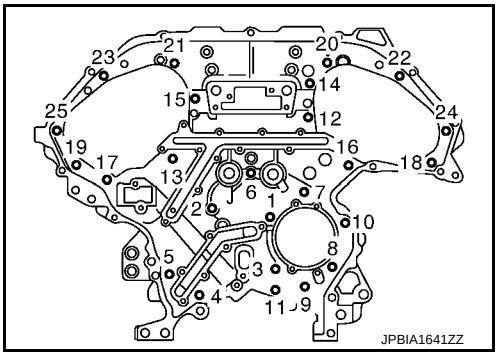

CAUTION:

- **Never remove plate metal cover (1) of oil passage.**
- **After removal, handle rear timing chain case carefully so it does not tilt, cant, or warp under a load.**

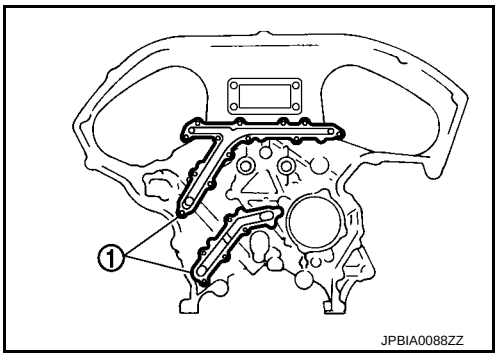

17. Remove oil temperature sensor from timing chain case (rear) if necessary.
18. Remove O-rings (1) from cylinder block.

⇦ : Engine front

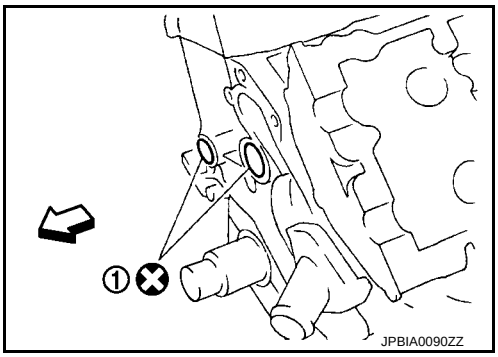

19. Remove timing chain tensioners (secondary) from cylinder head as follows, if necessary.

a. Remove camshaft brackets (No. 1). Refer to EM-87, "Exploded View".

b. Remove timing chain tensioners (secondary) (1) with a stopper pin (2) attached.

A : Bank 1

B : Bank 2

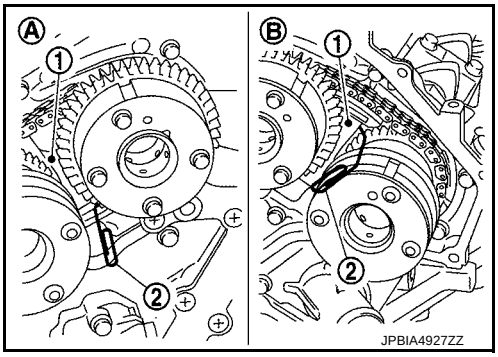

cardiagn.com

20. Use a scraper to remove all traces of old liquid gasket from front timing chain case, and opposite mating surfaces.

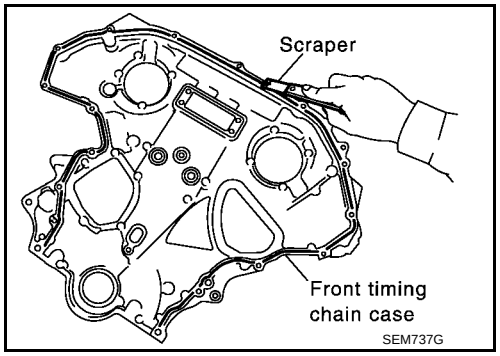

- Remove old liquid gasket from bolt hole (B) and thread.

  A : Remove sticking old liquid gasket

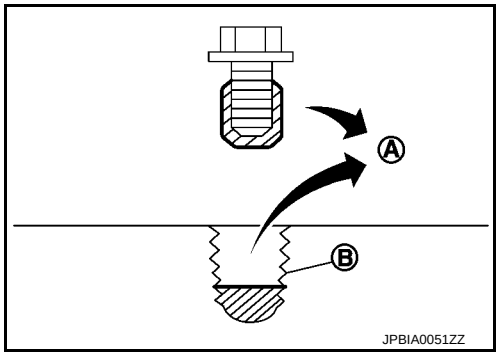

21. Use a scraper to remove all traces of old liquid gasket from water pump cover.

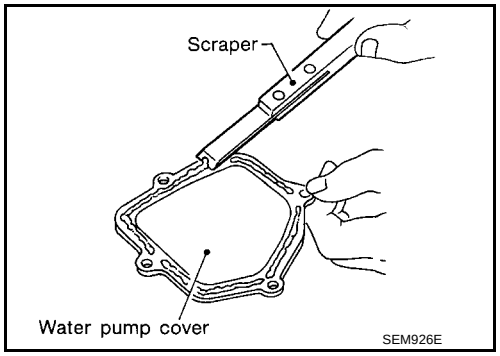

INSTALLATION

CAUTION:

Do not reuse O-rings.

NOTE:

The below figure shows the relationship between the mating mark on each timing chain and that on the corresponding sprocket, with the components installed.

cardiagn.com

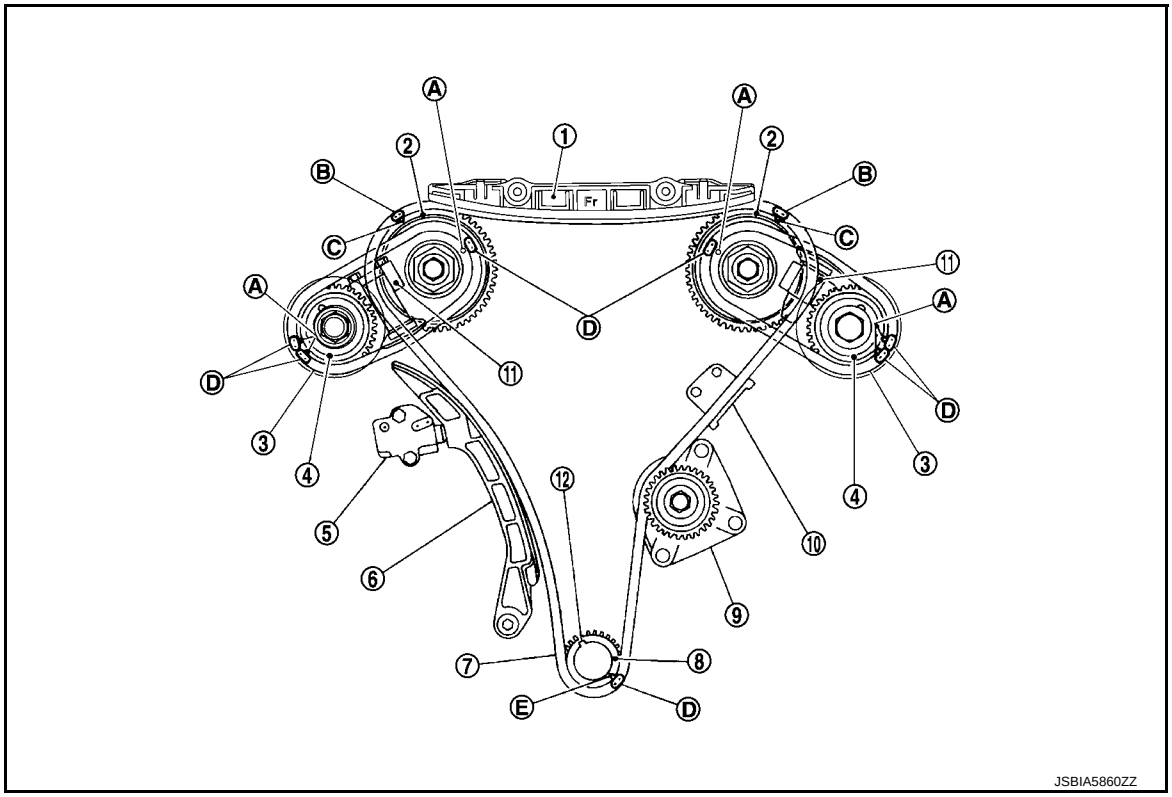

1.	Internal chain guide	2.	Camshaft sprocket (INT)	3.	Timing chain (secondary)
4.	Camshaft sprocket (EXH)	5.	Timing chain tensioner (primary)	6.	Slack guide
7.	Timing chain (primary)	8.	Crankshaft sprocket	9.	Water pump
10.	Tension guide	11.	Timing chain tensioner (secondary)	12.	Crankshaft key
A.	Mating mark	B.	Mating mark (green link)	C.	Mating mark (punched)
D.	Mating mark (orange)	E.	Mating mark (notched)		

1. Install timing chain tensioners (secondary) to cylinder head as follows if removed.
   - Install timing chain tensioners (secondary) with a stopper pin attached and new O-ring.
2. Install No.1 camshaft bracket. Refer to EM-88, "Removal and Installation".
3. Measure difference in levels between front end faces of camshaft bracket (No. 1) and cylinder head.

   Standard : –0.14 to 0.14 mm (–0.0055 to 0.0055 in)

   - Measure two positions (both intake and exhaust side) for a single bank.
   - If the measured value is out of the standard, reinstall camshaft bracket (No. 1).

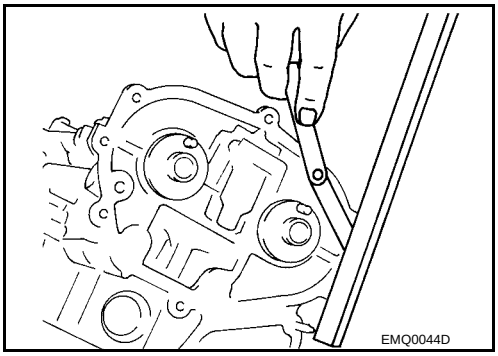

4. Install rear timing chain case as follows:

cardiagn.com

- Install new O-rings (1) onto cylinder block.

⇦ : Engine front

CAUTION:
Do not reuse O-rings.

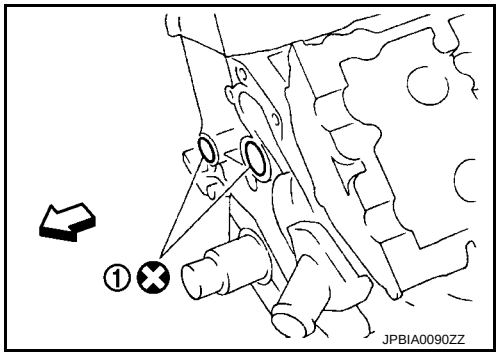

a. Apply liquid gasket with the tube presser (commercial service tool) to rear timing chain case back side as shown in the figure.
Use Genuine RTV Silicone Sealant or equivalent. Refer to GI-22, "Recommended Chemical Products and Sealants".
CAUTION:
- **For "A" in the figure, completely wipe out liquid gasket extended on a portion touching at engine coolant.**
- **Apply liquid gasket on installation position of water pump and cylinder head very completely.**

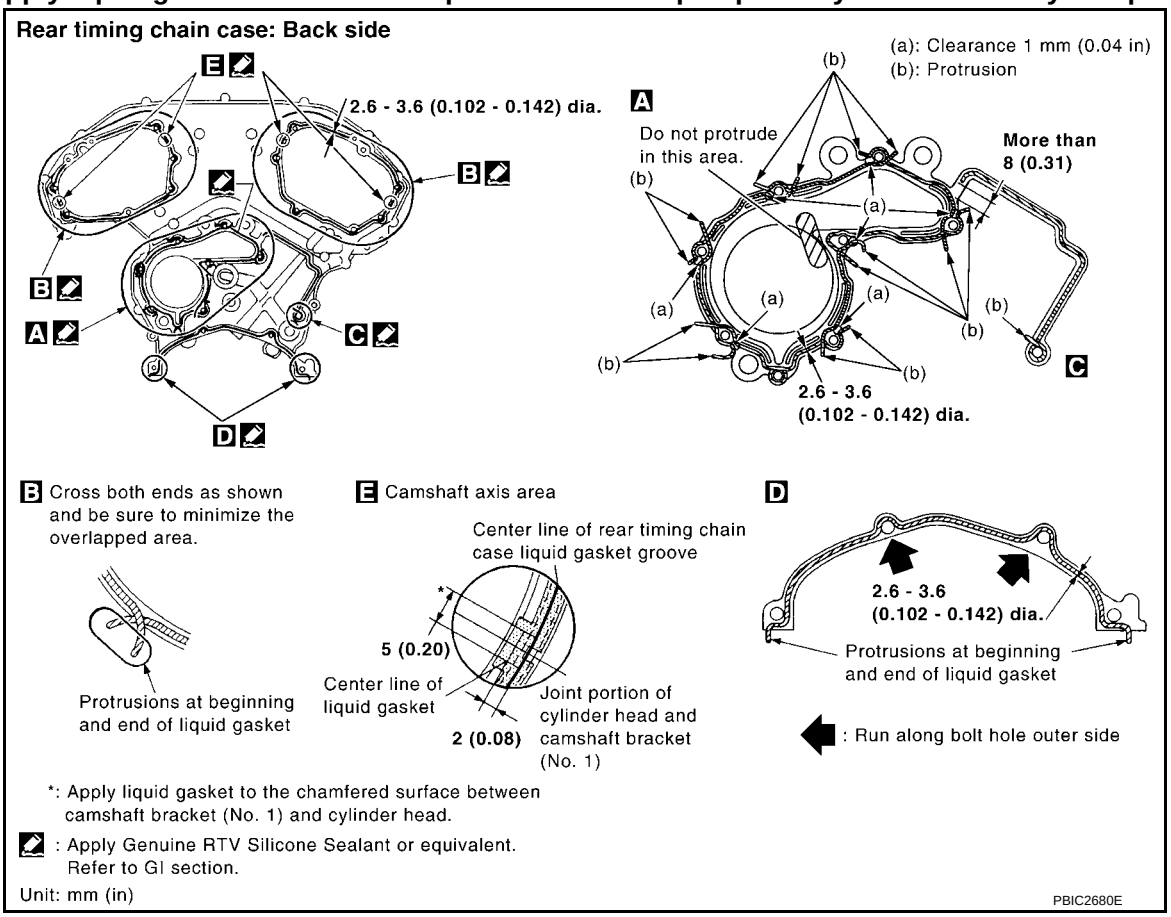

b. Align rear timing chain case with dowel pins (bank 1 and bank 2) on cylinder block and install rear timing chain case.
- Check O-rings stay in place during installation to cylinder block and cylinder head.

cardiagn.com

c. Tighten mounting bolts in numerical order as shown in the figure.
   - There are two types of mounting bolts. Refer to the following for locating bolts.

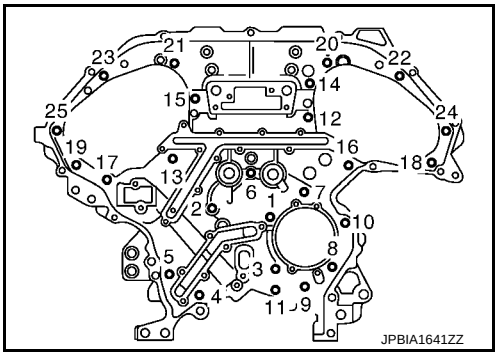

Bolt length:	Bolt position
20 mm (0.79 in)	: 1, 2, 3, 6, 7, 8, 9, 10
16 mm (0.63 in)	: Except the above

: 12.7 N·m (1.3 kg-m, 9 ft-lb)

d. After all bolts tightening, retighten them to the specified in numerical order as shown in the figure.
   - If liquid gasket protrudes, wipe it off immediately.

e. After installing rear timing chain case (1), check the surface height difference between the following parts on the oil pan (upper) mounting surface.

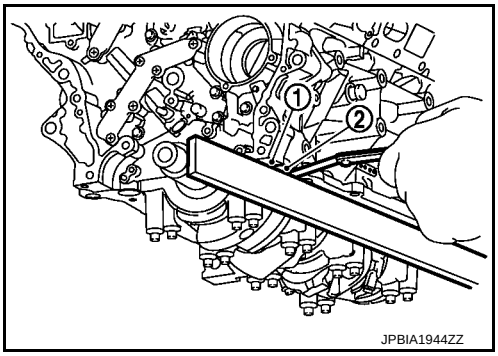

2 : Cylinder block

Standard

Rear timing chain case to cylinder block:

–0.24 to 0.14 mm (–0.009 to 0.006 in)

- If not within the standard, repeat the installation procedure.

5. Install water pump. Refer to CO-20, "Removal and Installation".
6. Install oil pump. Refer to LU-14, "Removal and Installation".
7. Check that dowel pin (A) and crankshaft key (1) are located as shown in the figure. (No. 1 cylinder at compression TDC)
   NOTE:
   Though camshaft does not stop at the position as shown in the figure, for the placement of cam nose, it is generally accepted camshaft is placed for the same direction of the figure.

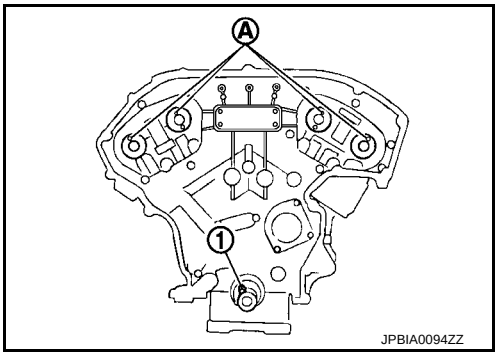

Camshaft dowel pin

: At cylinder head upper face side in each bank

Crankshaft key

: At cylinder head side of bank 1

CAUTION:
Hole on small dia. side must be used for intake side dowel pin hole. Never misidentify (ignore big dia. side).

8. Install timing chain (secondary) and camshaft sprockets (INT and EXH) as follows:
   CAUTION:
   Mating marks between timing chain and sprockets slip easily. Confirm all mating mark positions repeatedly during the installation process.

cardiagn.com

a. Push plunger of timing chain tensioner (secondary) and keep it pressed in with stopper pin (A).

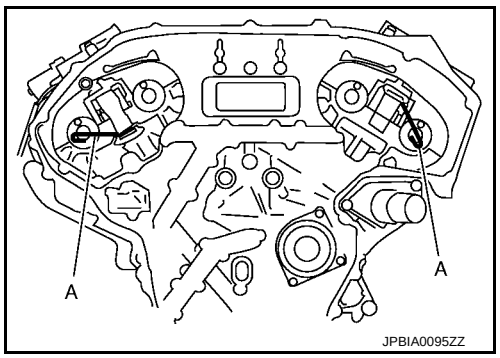

b. Install timing chain (secondary) (1) and camshaft sprockets (INT and EXH).

A : Camshaft sprocket (INT) back face
B : Orange link
C : Mating mark (Circle)
D : Camshaft sprocket (EXH) back face
E : Mating mark (2 circle on front face)
F : Dowel pin groove
G : Mating mark (2 ovals on front face)
H : Mating mark (Oval)
I : Dowel pin hole

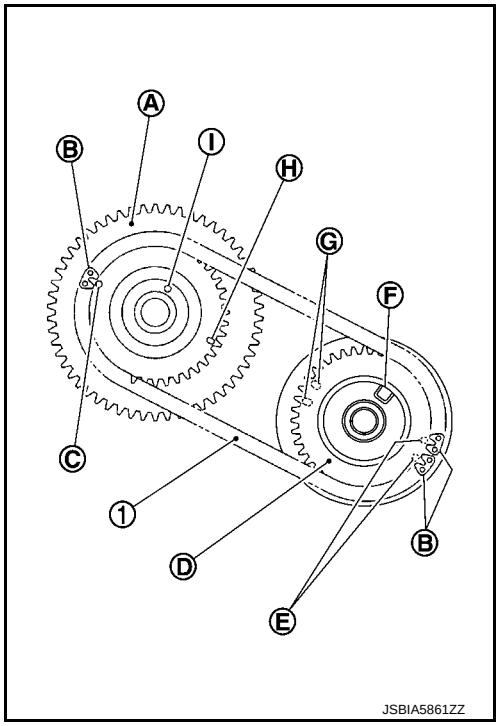

NOTE:
Figure shows bank 1 (rear view).

- Align the mating marks on timing chain (secondary) (orange link) with the ones on camshaft sprockets (INT and EXH) (punched), and install them.
  NOTE:
  - Mating marks for camshaft sprocket (INT) are on the back side of camshaft sprocket (secondary).
  - There are two types of mating mark, circle and oval types. They should be used for the bank 1 and bank 2, respectively.

Bank 1 : Use circle type.
Bank 2 : Use oval type.

- Align dowel pin on camshafts with the groove or hole on sprockets, and install them.
- On the intake side, align dowel pin on the camshaft front end with dowel pin hole on the back side of camshaft sprocket, and install them.
- On the exhaust side, align dowel pin on camshaft front end with dowel pin groove on camshaft sprocket, and install them.
- In case that positions of each mating mark and each dowel pin are not fit on mating parts, make fine adjustment to the position holding the hexagonal portion on camshaft with wrench or equivalent.
- Mounting bolts for camshaft sprockets must be tightened in the next step. Tightening them by hand is enough to prevent the dislocation of dowel pins.
- It may be difficult to visually check the dislocation of mating marks during and after installation. To make the matching easier, make a mating mark (A) on the top of sprocket teeth and its extended line in advance with paint.

B : Mating mark (orange link)

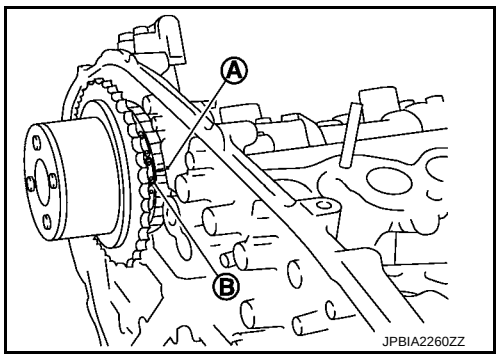

cardiagn.com

c. After confirming the mating marks are aligned, tighten camshaft sprocket mounting bolts.
   - Secure camshaft using wrench at the hexagonal portion to tighten mounting bolts.

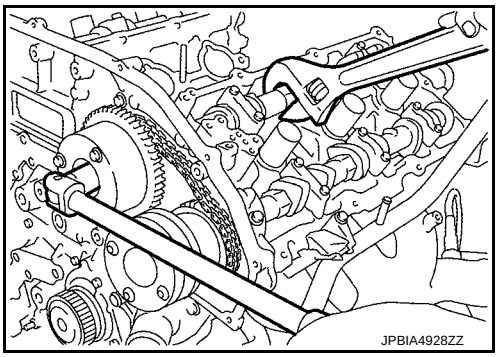

d. Pull stopper pins (2) out from timing chain tensioners (secondary) (1).

   A : Bank 1
   C : Bank 2

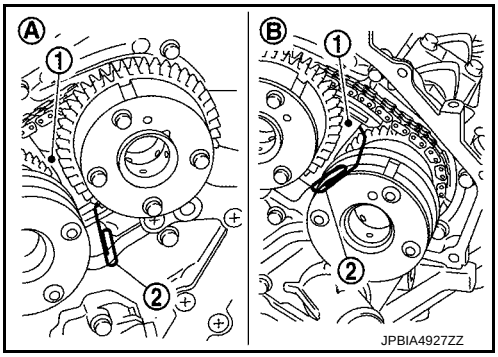

9. Install tension guide.
10. Install timing chain (primary) as follows:

a. Install crankshaft sprocket (1).

   A : Crankshaft side
   B : Engine front
   C : Mating mark (front side)

   - Check the mating marks on crankshaft sprocket face the front of the engine.

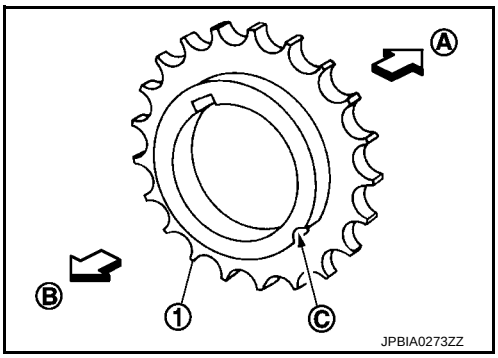

b. Install timing chain (primary).

cardiagn.com

- Install timing chain (primary) so the mating mark (punched) (B) on camshaft sprocket (INT) (1) is aligned with the green link (A) on timing chain, while the mating mark (notched) (C) on crankshaft sprocket (2) is aligned with the orange link (D) on timing chain, as shown in the figure.

  3 : Water pump

- When it is difficult to align mating marks of timing chain (primary) with each sprocket, gradually turn camshaft using wrench on the hexagonal portion to align it with the mating marks.
- During alignment, be careful to prevent dislocation of mating mark alignments of timing chains (secondary).

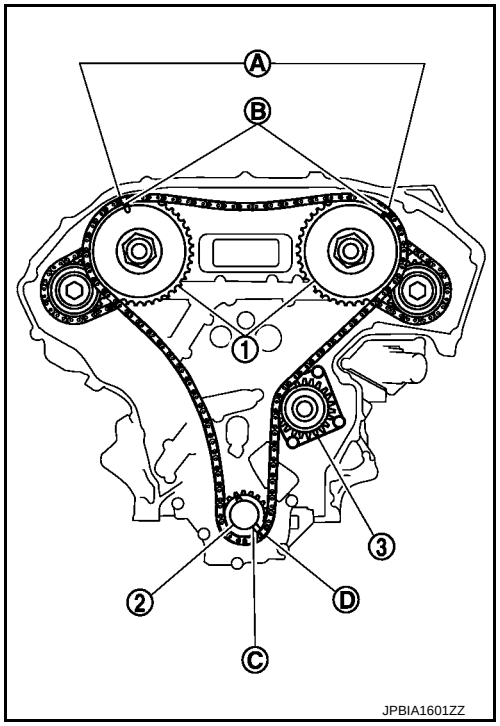

11. Install internal chain guide (1) and slack guide (2).

    3 : Tension guide

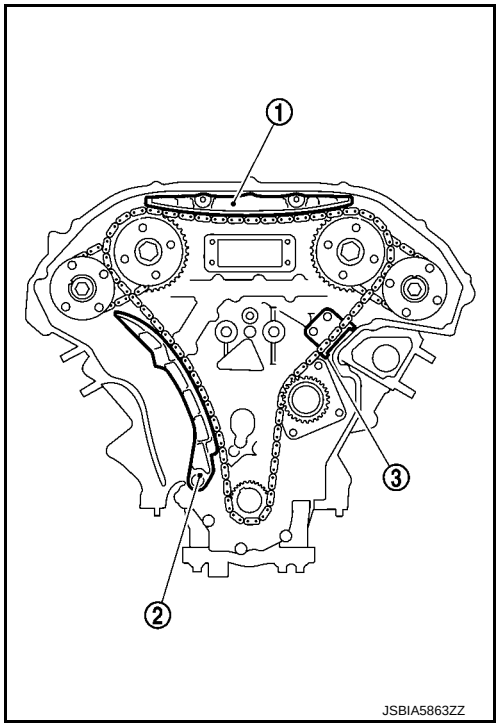

CAUTION:
Never over tighten slack guide mounting bolt (2). It is normal for a gap (A) to exist under the bolt seat when mounting bolt is tightened to specification.

1 : Slack guide
3 : Cylinder block

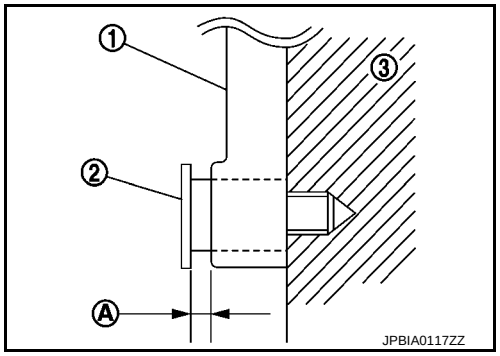

cardiagn.com

12. Install the timing chain tensioner (primary) with the following procedure:

a. Pull plunger stopper tab (A) up (or turn lever downward) so as to remove plunger stopper tab from the ratchet of plunger (D).
NOTE:
Plunger stopper tab and lever (C) are synchronized.

b. Push plunger into the inside of tensioner body.

c. Hold plunger in the fully compressed position by engaging plunger stopper tab with the tip of ratchet.

d. To secure lever, insert stopper pin (E) through hole of lever into tensioner body hole (B).
- The lever parts and the tab are synchronized. Therefore, the plunger will be secured under this condition.

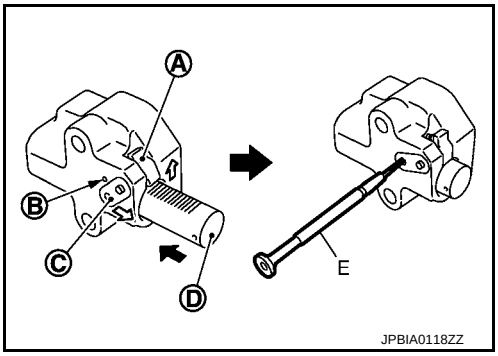

NOTE:
Figure shows the example of 1.2 mm (0.047 in) diameter thin screwdriver being used as the stopper pin.

e. Install timing chain tensioner (primary) (1).
- Remove any dirt and foreign materials completely from the back and the mounting surfaces of timing chain tensioner (primary).

f. Pull out stopper pin (A) after installing, and then release plunger.

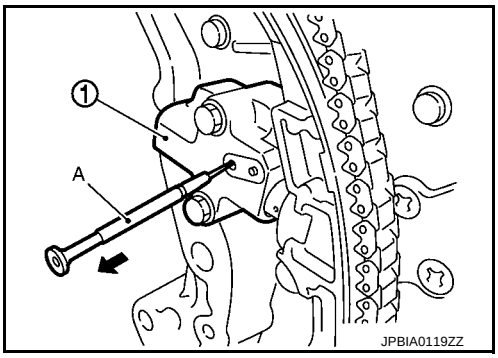

13. Check again that the mating marks on each sprocket and each timing chain have not slipped out of alignment.

14. Install new O-rings (1) on rear timing chain case.

A : Bank 1
B : Bank 2

CAUTION:
Do not reuse O-rings.

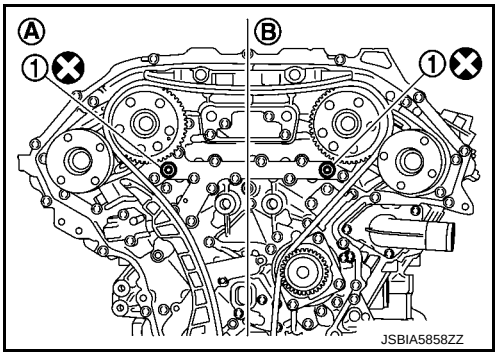

15. Install new front oil seal on front timing chain case.
- Apply new engine oil to both oil seal lip and dust seal lip.
- Install it so that each seal lip is oriented as shown in the figure.

A : Oil seal lip
B : Dust seal lip
⇦ : Engine inside
⬅ : Engine outside

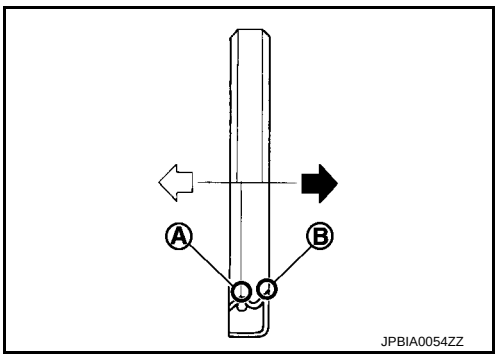

cardiagn.com

- Using a suitable drift [outer diameter: 60 mm (2.36 in)], press-fit oil seal until it becomes flush with front timing chain case end face.
- Check the garter spring is in position and seal lip is not inverted.

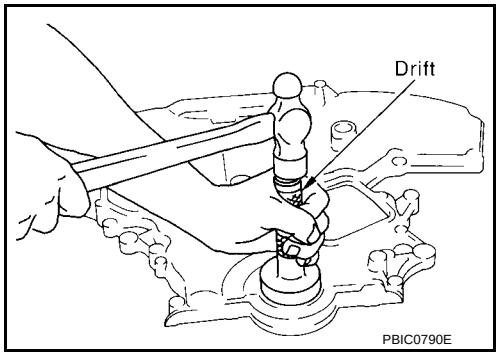

16. Install front timing chain case as follows:

a. Apply a continuous bead of liquid gasket with the tube presser (commercial service tool) to front timing chain case back side as shown in the figure.

D : Bolt hole
E : Protrusion
f : ϕ2.6 - 3.6 mm (0.102 - 0.142 in)

Use Genuine RTV Silicone Sealant or equivalent. Refer to GI-22, "Recommended Chemical Products and Sealants".

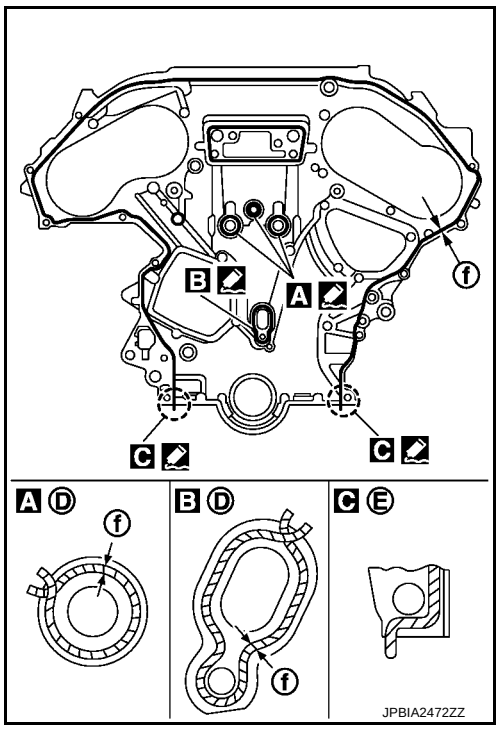

b. Install front timing chain case as to fit its dowel pin hole together dowel pin on rear timing chain case.

c. Tighten mounting bolts to the specified torque in numerical order as shown in the figure.
- There are two types of mounting bolt. Refer to the following for locating bolts.

M8 bolts : 1, 2

: 28.4 N·m (2.9 kg-m, 21 ft-lb)

M6 bolts : Except the above

: 12.7 N·m (1.3 kg-m, 9 ft-lb)

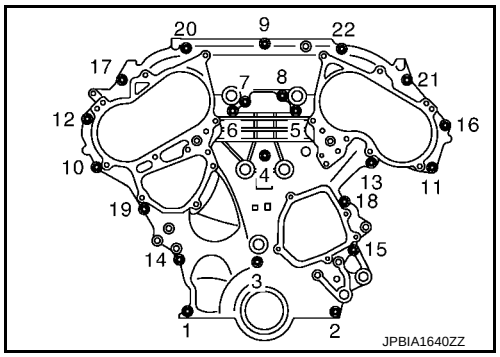

d. After all bolts tightening, retighten them to the specified torque in numerical order as shown in the figure.

CAUTION:
Be sure to wipe off any excessive liquid gasket leaking on surface mating with oil pan (upper).

cardiagn.com

e. After installing front timing chain case, check the surface height difference between the following parts on the oil pan (upper) mounting surface.

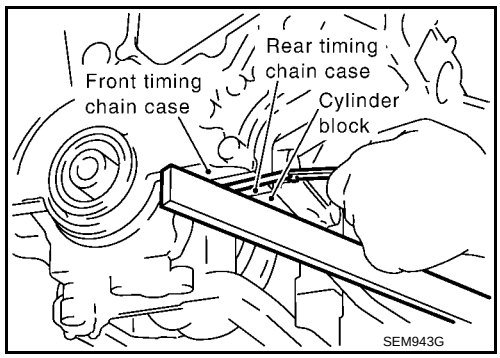

Standard

Front timing chain case to rear timing chain case:

–0.14 to 0.14 mm (–0.006 to 0.006 in)

- If not within the standard, repeat the installation procedure.

17. Install water pump cover to front timing chain case.
    - Apply a continuous bead of liquid gasket with the tube presser (commercial service tool) to water pump cover (1) as shown in the figure.

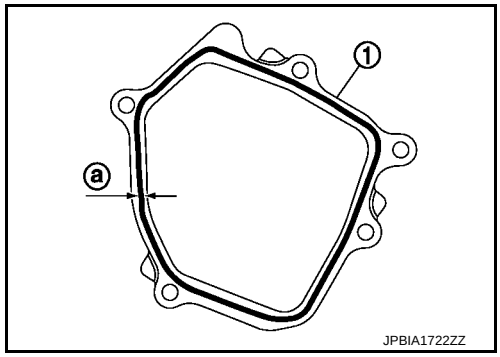

a : ϕ2.3 - 3.3 mm (0.091 - 0.130 in)

Use Genuine RTV Silicone Sealant or equivalent. Refer to GI-22, "Recommended Chemical Products and Sealants".

18. Install intake camshaft sprocket covers as follows:

a. Install new seal rings in shaft grooves.

b. Install camshaft sprocket cover to timing chain case (front).

CAUTION:
- **To insert, align shaft and the shaft hole center of cam sprocket on the intake side.**
- **Securely install seal ring to each shaft groove.**

c. Being careful not to move seal rings from the installation grooves, align dowel pins on front timing chain case with the holes to install camshaft sprocket covers.

d. Tighten mounting bolts in numerical order as shown in the figure.

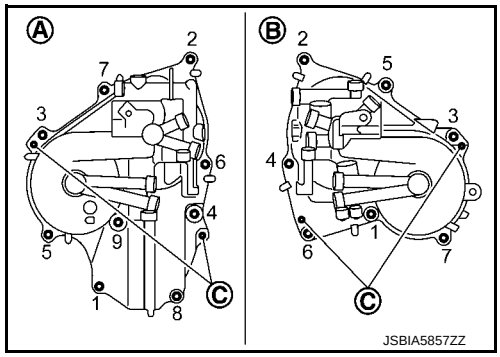

A : Bank 1
B : Bank 2
C : Dowel pin hole

19. Install oil pan (upper and lower) Refer to EM-39, "Exploded View"

20. Install crankshaft pulley as follows:

a. Install crankshaft pulley, taking care not to damage front oil seal.

CAUTION:
When press-fitting crankshaft pulley with a plastic hammer, tap on its center portion (not circumference).

b. Fix crankshaft with the pulley holder (commercial service tool).

c. Tighten crankshaft pulley bolt.

: 44.1 N·m (4.5 kg-m, 33 ft-lb)

cardiagn.com

d. Place a paint mark (A) on crankshaft pulley (1) aligning with the angle mark (B) on crankshaft pulley bolt (2). Tighten the bolt 90 degrees (angle tightening).

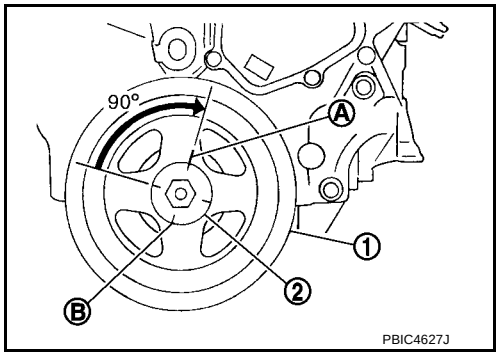

21. Rotate crankshaft pulley in normal direction (clockwise when viewed from engine front) to confirm it turns smoothly.
22. Install in the reverse order of removal after this step.

Inspection

INFOID:0000000012409893

INSPECTION AFTER REMOVAL

Timing Chain

Check for cracks and any excessive wear at link plates and roller links of timing chain. Replace timing chain if necessary.

A : Crack
B : Wear

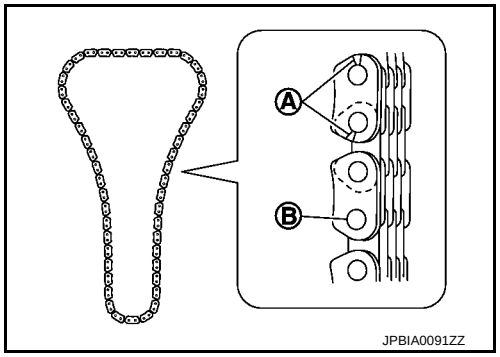

INSPECTION AFTER INSTALLATION

Inspection for Leakage

The following are procedures for checking fluids leakage and lubricates leakage.

- Before starting engine, check oil/fluid levels including engine coolant and engine oil. If less than required quantity, fill to the specified level. Refer to MA-10, "Fluids and Lubricants".
- Use procedure below to check for fuel leakage.
  - Turn ignition switch “ON” (with engine stopped). With fuel pressure applied to fuel piping, check for fuel leakage at connection points.
  - Start engine. With engine speed increased, check again for fuel leakage at connection points.
- Run engine to check for unusual noise and vibration.

  NOTE:
  If hydraulic pressure inside chain tensioner drops after removal/installation, slack in guide may generate a pounding noise during and just after the engine start. However, this does not indicate an unusualness. Noise will stop after hydraulic pressure rises.
- Warm up engine thoroughly to check there is no leakage of fuel, or any oil/fluids including engine oil and engine coolant.
- Bleed air from lines and hoses of applicable lines, such as in cooling system.
- After cooling down engine, again check oil/fluid levels including engine oil and engine coolant. Refill to the specified level, if necessary.

Summary of the inspection items:

Items	Before starting engine	Engine running	After engine stopped
Engine coolant	Level	Leakage	Level
Engine oil	Level	Leakage	Level

cardiagn.com

Transmission / transaxle fluid	AT & CVT Models	Leakage	Level / Leakage	Leakage
	MT Models	Level / Leakage	Leakage	Level / Leakage
Other oils and fluids*		Level	Leakage	Level
Fuel		Leakage	Leakage	Leakage
Exhaust gases		—	Leakage	—

*: Power steering fluid, brake fluid, etc.

cardiagn.com

CAMSHAFT

Exploded View

INFOID:0000000012409894

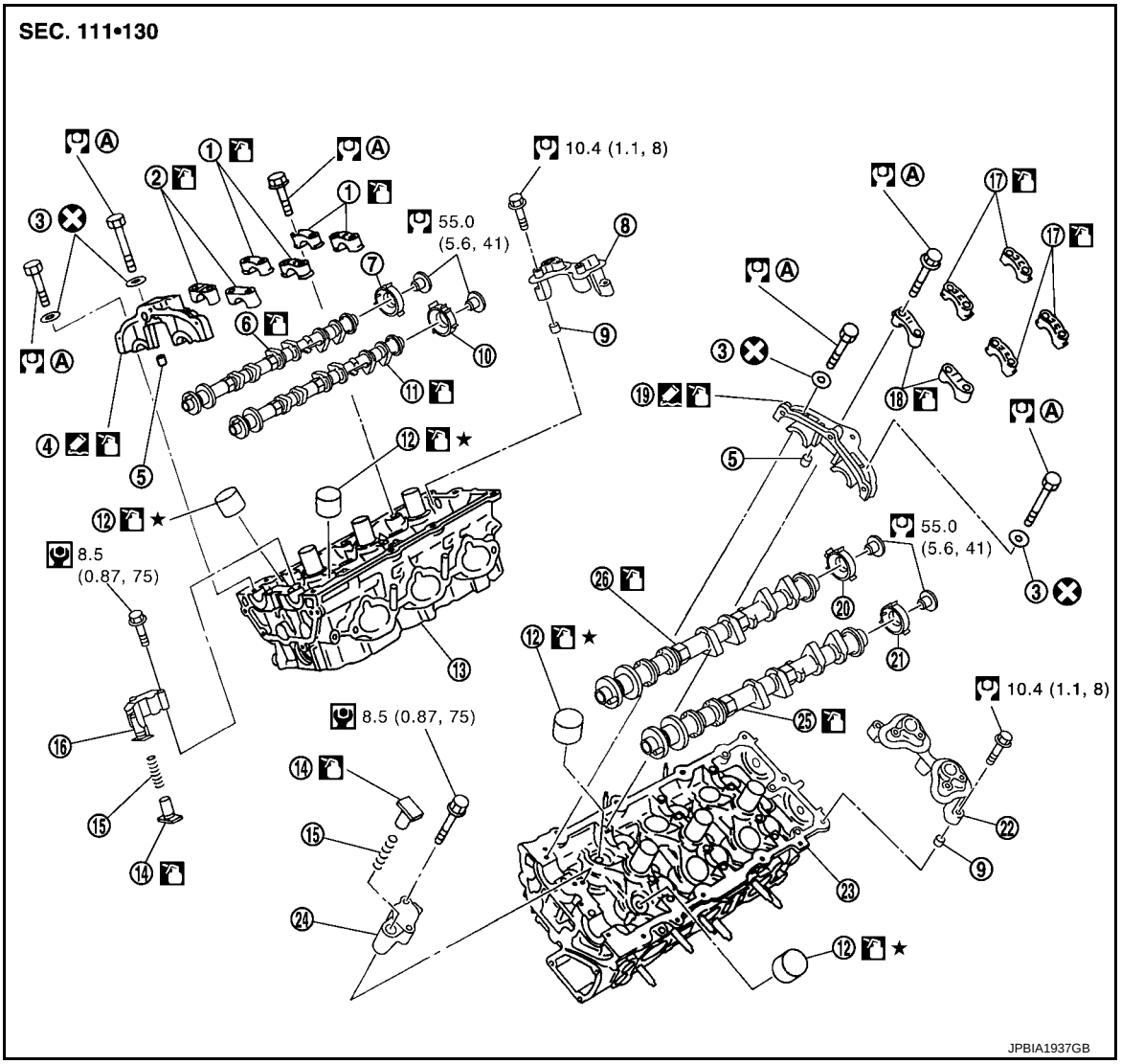

1.	Camshaft bracket (No. 3, 4) (bank 1)	2.	Camshaft bracket (No. 2) (bank 1)	3.	Seal washer
4.	Camshaft bracket (No. 1) (bank 1)	5.	Dowel pin	6.	Camshaft (EXH) (bank 1)
7.	Camshaft signal plate (EXH) (bank 1)	8.	Camshaft sensor bracket (bank 1)	9.	Dowel pin
10.	Camshaft signal plate (INT) (bank 1)	11.	Camshaft (INT) (bank 1)	12.	Valve lifter
13.	Cylinder head (bank 1)	14.	Plunger	15.	Spring
16.	Timing chain tensioner (secondary) (bank 1)	17.	Camshaft bracket (No. 3, 4) (bank 2)	18.	Camshaft bracket (No. 2) (bank 2)
19.	Camshaft bracket (No. 1) (bank 2)	20.	Camshaft signal plate (INT) (bank 2)	21.	Camshaft signal plate (EXH) (bank 2)
22.	Camshaft sensor bracket (bank 2)	23.	Cylinder head (bank 2)	24.	Timing chain tensioner (secondary) (bank 2)
25.	Camshaft (EXH) (bank 2)	26.	Camshaft (INT) (bank 2)		
A.	Comply with the assembly procedure when tightening. Refer to EM-88				

⊗ : Always replace after every disassembly.

: N·m (kg-m, ft-lb)

: N·m (kg-m, in-lb)

cardiagn.com

: Should be lubricated with oil.

: Sealing point

★ : Select with proper thickness.

Removal and Installation

INFOID:0000000012409895

REMOVAL

1. Remove front timing chain case, camshaft sprocket, timing chain and rear timing chain case. Refer to EM-69, "Removal and Installation".
2. Loosen camshaft sensor bracket bolts in the reverse order as shown in the figure.

   ⇦ : Engine front

   NOTE:
   The order of loosening bolts in the same for bank 1 and bank 2.

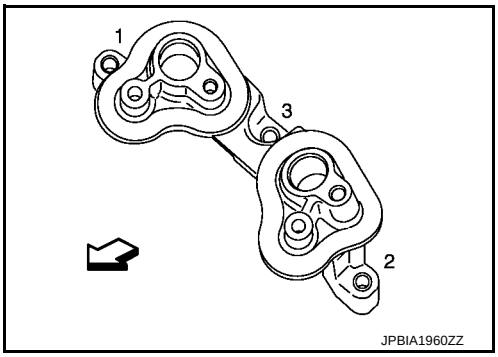

3. Remove camshaft brackets.
   - Mark camshafts, camshaft brackets and bolts so they are placed in the same position and direction for installation.
   - Equally loosen camshaft bracket bolts in several steps in the reverse order as shown in the figure.

   ⇦ : Engine front

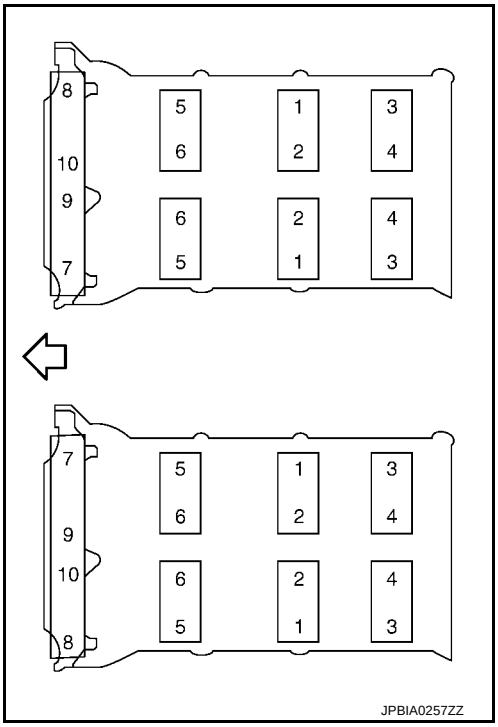

4. Remove camshafts.
5. Remove valve lifters.
   - Identify installation positions, and store them without mixing them up.

cardiagn.com

6. Remove timing chain tensioners (secondary) (1) from cylinder head.

   A : Bank 1
   B : Bank 2

   - Remove timing chain tensioner (secondary) with its stopper pin (C) attached.

   NOTE:
   Stopper pin was attached when timing chain (secondary) was removed.

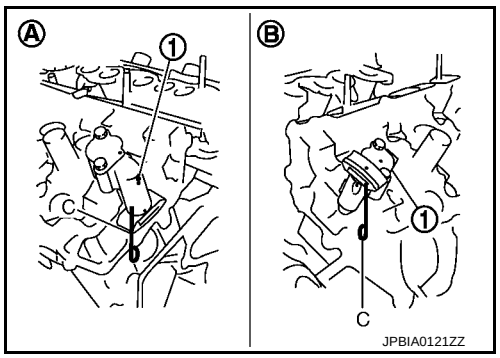

INSTALLATION

CAUTION:
Do not reuse washers.

1. Install timing chain tensioners (secondary) (1) on both sides of cylinder head.

   A : Bank 1
   B : Bank 2

   - Install timing chain tensioner (secondary) with its stopper pin (C) attached.
   - Install timing chain tensioner (secondary) with sliding part facing downward on cylinder head (bank 1), and with sliding part facing upward on cylinder head (bank 2).

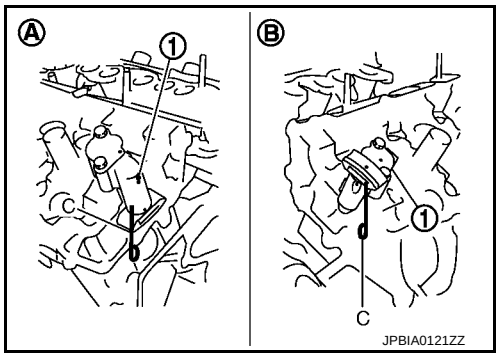

2. Install valve lifters.
   - Install it in the original position.
3. Install camshafts.

   ⇦ : Engine front

   - Follow your identification marks made during removal, or follow the identification marks that are present on new camshafts for proper placement and direction.

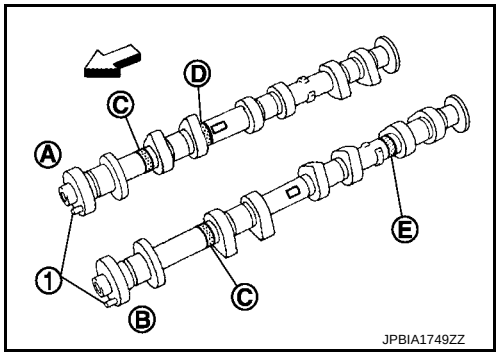

Bank	INT/EXH	Dowel pin (1)	Paint marks		
			M1 (D)	M2 (E)	M3 (C)
1	EXH (B)	Yes	No	Brown	Light blue
	INT (A)	Yes	Purple	No	Light blue
2	INT (A)	Yes	Purple	No	Light blue
	EXH (B)	Yes	No	Brown	Light blue

   - Install camshaft so dowel pin (A) on front end face are positioned as shown in the figure. (No. 1 cylinder TDC on its compression stroke)

   NOTE:
   Though camshaft does not stop at the portion as shown in the figure, for the placement of cam nose, it is generally accepted camshaft is placed for the same direction of the figure.

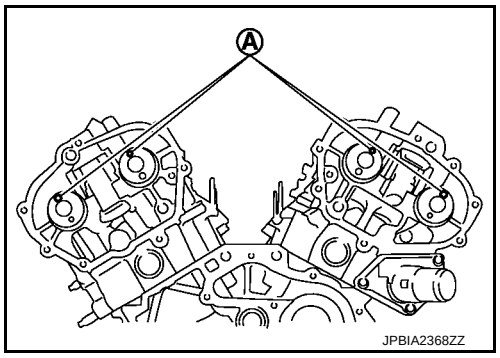

4. Install camshaft brackets.

cardiagn.com

- Remove foreign material completely from camshaft bracket backside and from cylinder head installation face.
- Install camshaft bracket in original position and direction as shown in the figure.

A : No. 1
B : No. 2
C : No. 3
D : No. 4
E : Bank 1
F : Exhaust side
G : Intake side
H : Bank 2
I : Intake side
J : Exhaust side
⇦ : Engine front

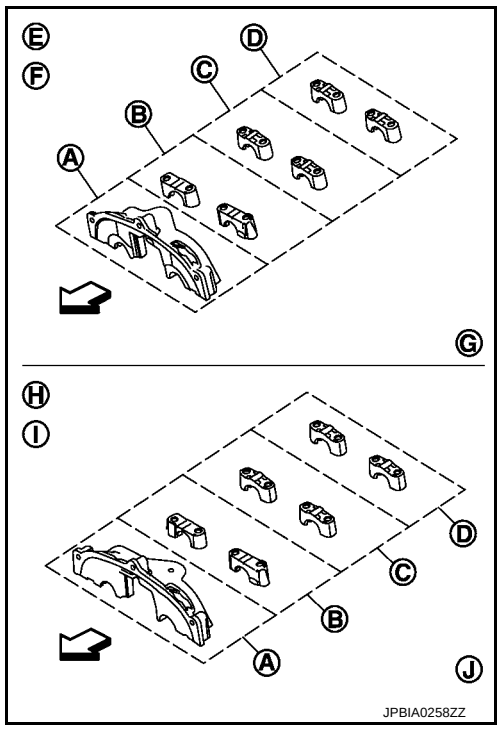

- Install camshaft brackets (No. 2 to 4) aligning the stamp marks (A) as shown in the figure.

B : Bank 1
C : Bank 2
⇦ : Engine front

NOTE:
There are no identification marks indicating left and right for camshaft bracket (No. 1).

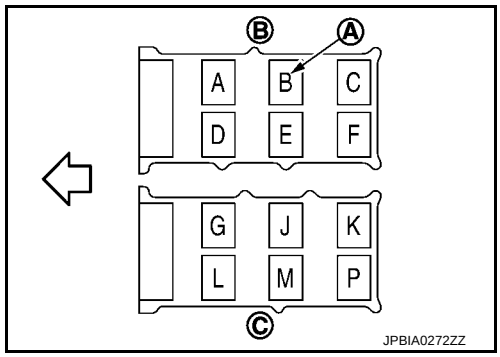

- Apply liquid gasket to mating surface of camshaft bracket (No. 1) as shown on bank 1 and bank 2.

a : 8.5 mm (0.335 in)
b : 2 mm (0.08 in)
c : Clearance 5 mm (0.20 in)
d : ϕ2.0 - 2.3 mm (0.079 - 0.091 in)
* : Apply liquid gasket to rear timing chain case side

Use Genuine RTV Silicone Sealant or equivalent. Refer to GI-22, "Recommended Chemical Products and Sealants".

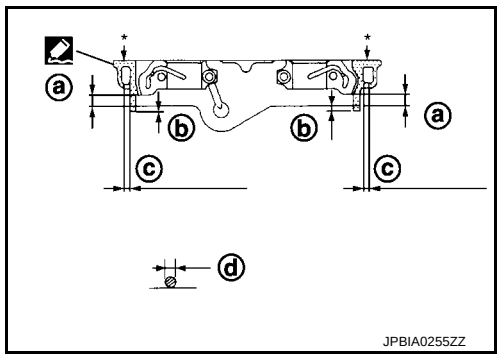

cardiagn.com

5. Tighten camshaft bracket bolts in the following steps, in numerical order as shown in the figure.

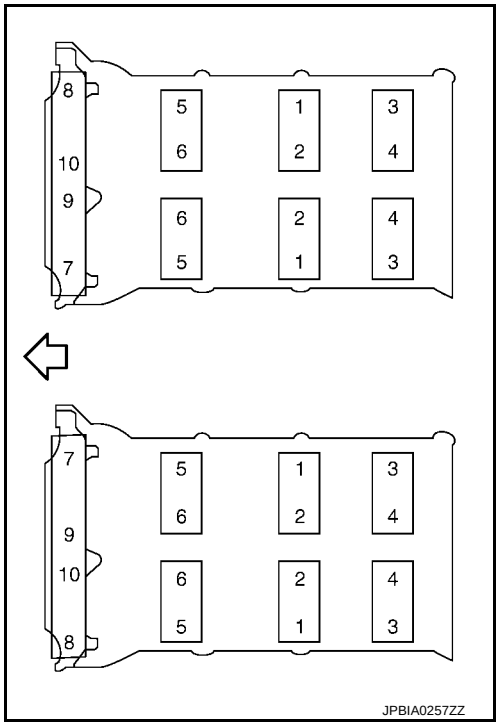

⇦ : Engine front

CAUTION:
Do not reuse washers.

a. Tighten No. 7 to 10 in order as shown.

: 1.96 N·m (0.20 kg-m, 1 ft-lb)

b. Tighten No. 1 to 6 in order as shown.

: 1.96 N·m (0.20 kg-m, 1 ft-lb)

c. Tighten No. 1 to 10 in numerical order as shown.

: 5.88 N·m (0.60 kg-m, 4 ft-lb)

d. Tighten No. 1 to 10 in numerical order as shown.

: 10.4 N·m (1.1 kg-m, 8 ft-lb)

CAUTION:
After tightening mounting bolts of camshaft brackets (No. 1), be sure to wipe off excessive liquid gasket from the parts list below.
- **Mating surface of rocker cover**
- **Mating surface of rear timing chain case**

6. Tighten camshaft sensor bracket bolts in numerical order as shown in the figure.

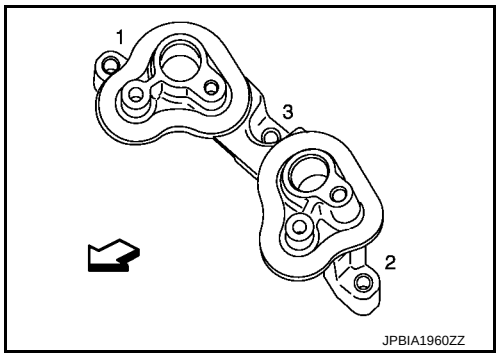

⇦ : Engine front

NOTE:
The order of tightening bolts in the same for bank 1 and bank 2.

7. Inspect and adjust the valve clearance. Refer to EM-19, "Inspection and Adjustment".
8. Install in the reverse order of removal after this step.

Inspection

INFOID:0000000012409896

INSPECTION AFTER REMOVAL

Camshaft Runout
- Put V-block on precise flat table, and support No. 2 and 4 journals of camshaft.

CAUTION:
Never support No. 1 journal (on the side of camshaft sprocket) because it has a different diameter from the other three locations.

cardiagn.com

- Set a dial indicator vertically to No. 3 journal.
- Turn camshaft to one direction with hands, and measure the camshaft runout on a dial indicator. (Total indicator reading)

Standard and limit : Refer to EM-134, "Camshaft".

- If it exceeds the limit, replace camshaft.

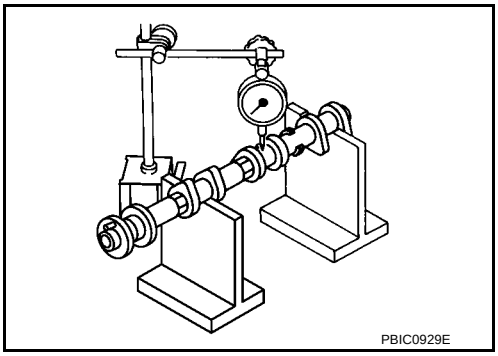

Camshaft Cam Height

- Measure the camshaft cam height with a micrometer.

Standard cam height (Intake and exhaust)	**: Refer to EM-134, "Camshaft".**
Cam wear limit	**: Refer to EM-134, "Camshaft".**

- If wear exceeds the limit, replace camshaft.

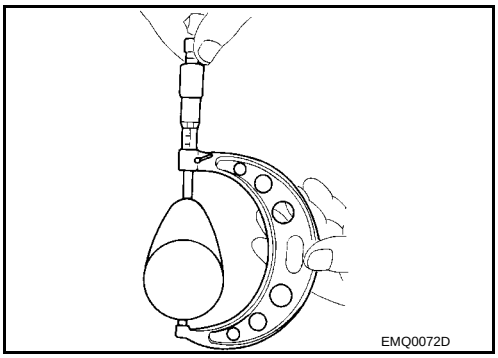

Camshaft Journal Oil Clearance

CAMSHAFT JOURNAL DIAMETER

- Measure the outer diameter of camshaft journal with a micrometer (A).

Standard and limit : Refer to EM-134, "Camshaft".

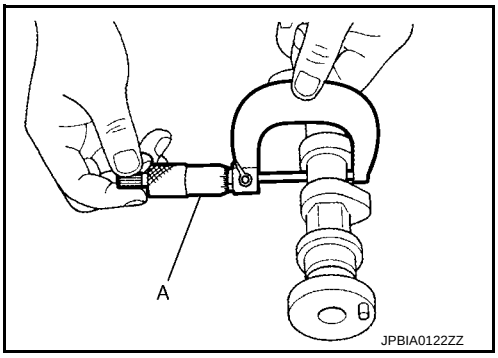

CAMSHAFT BRACKET INNER DIAMETER

- Tighten camshaft bracket bolt with the specified torque. Refer to “INSTALLATION” for the tightening procedure.
- Measure inner diameter (A) of camshaft bracket with a bore gauge.

Standard : Refer to EM-134, "Camshaft".

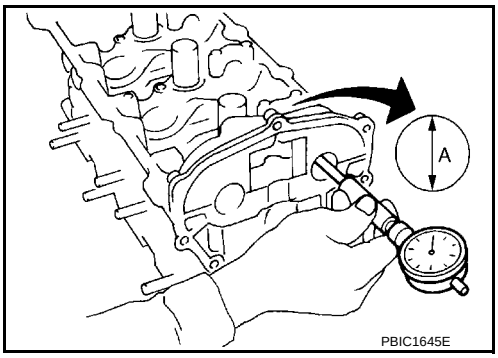

CAMSHAFT JOURNAL OIL CLEARANCE

- (Oil clearance) = (Camshaft bracket inner diameter) – (Camshaft journal diameter).

Standard and limit : Refer to EM-134, "Camshaft".

- If the calculated value exceeds the limit, replace either or both camshaft and cylinder head.

cardiagn.com

NOTE:
Camshaft brackets cannot be replaced as single parts, because there are machined together with cylinder head. Replace whole cylinder head assembly.

Camshaft End Play

- Install a dial indicator in thrust direction on front end of camshaft. Measure the end play of a dial indicator when camshaft is moved forward/backward (in direction to axis).

Standard and limit : Refer to EM-134, "Camshaft".

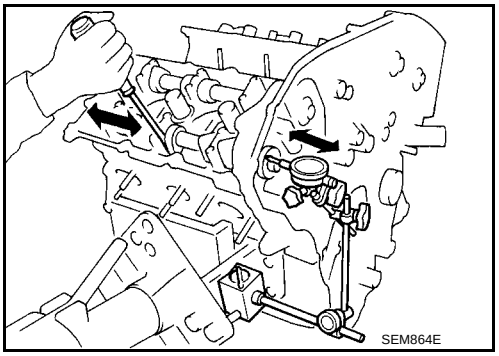

- Measure the following parts if out of the limit.
- Dimension “A” for camshaft No. 1 journal

Standard : 27.500 - 27.548 mm (1.0827 - 1.0846 in)

- Dimension “B” for cylinder head No. 1 journal bearing

Standard : 27.360 - 27.385 mm (1.0772 - 1.0781 in)

- Refer to the standards above, and then replace camshaft and/or cylinder head.

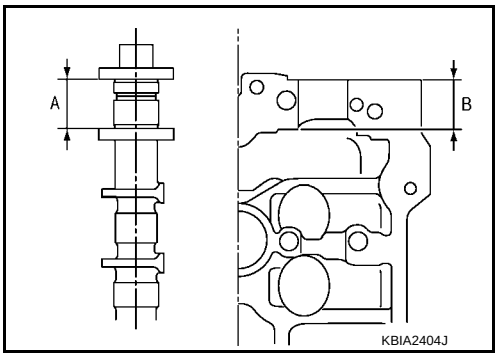

Camshaft Sprocket Runout

- Put V-block on precise flat table, and support No. 2 and 4 journals of camshaft.

CAUTION:
Never support No. 1 journal (on the side of camshaft sprocket) because it has a different diameter from the other three locations.

- Measure the camshaft sprocket runout with a dial indicator. (Total indicator reading)

Limit : Refer to EM-134, "Camshaft".

- If it exceeds the limit, replace camshaft sprocket.

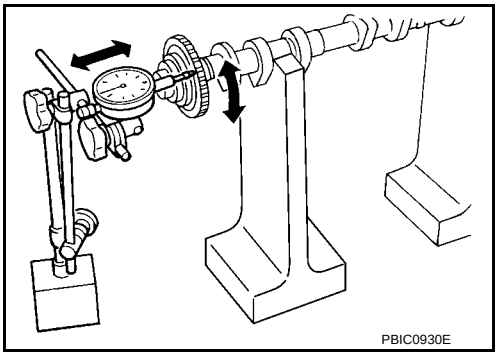

Valve Lifter

Check if surface of valve lifter has any wear or cracks.

- If anything above is found, replace valve lifter. Refer to EM-134, "Camshaft".

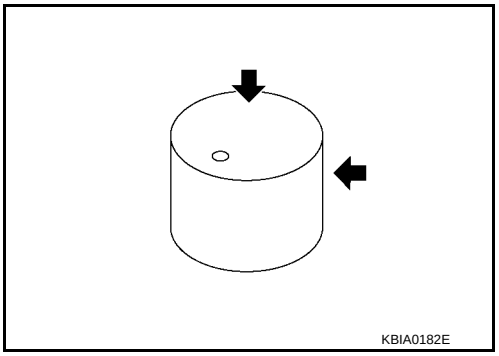

Valve Lifter Clearance

cardiagn.com

VALVE LIFTER OUTER DIAMETER

- Measure the outer diameter at 1/2 height of valve lifter with a micrometer (A) since valve lifter is in barrel shape.

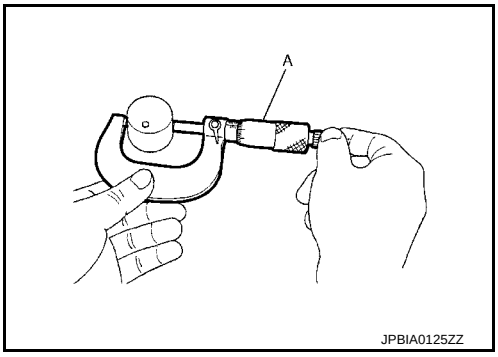

Standard (Intake and exhaust)	**: Refer to EM-134, "Camshaft".**

VALVE LIFTER HOLE DIAMETER

- Measure the inner diameter of valve lifter hole of cylinder head with an inside micrometer.

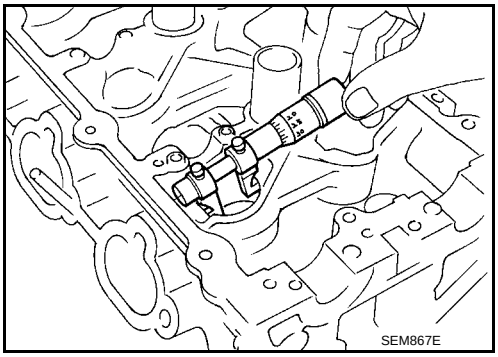

Standard (Intake and exhaust)	**: Refer to EM-134, "Camshaft".**

VALVE LIFTER CLEARANCE

- (Valve lifter clearance) = (Valve lifter hole diameter) – (Valve lifter outer diameter)

Standard (Intake and exhaust)	**: Refer to EM-134, "Camshaft".**

- If the calculated value is out of the standard, referring to each standard of valve lifter outer diameter and valve lifter hole diameter, replace either or both valve lifter and cylinder head.

INSPECTION AFTER INSTALLATION

Inspection of Camshaft Sprocket (INT) Oil Groove

CAUTION:

- **Perform this inspection only when DTC P0011 is detected in self-diagnostic results of CONSULT and it is directed according to inspection procedure of EC section. Refer to EC-183, "Component Inspection".**
- **Check when engine is cold so as to prevent burns from the splashing engine oil.**

1. Check engine oil level. Refer to LU-8, "Inspection".
2. Perform the following procedure so as to prevent the engine from being unintentionally started while checking.

a. Release the fuel pressure. Refer to EC-153, "Work Procedure".

b. Disconnect ignition coil and injector harness connectors. Refer to EM-54, "Exploded View" and EM-49, "Exploded View".

3. Remove intake valve timing control solenoid valve. Refer to EM-68, "Exploded View".

cardiagn.com

4. Crank engine, and then check that engine oil comes out from intake valve timing control solenoid valve hole (A). End crank after checking.

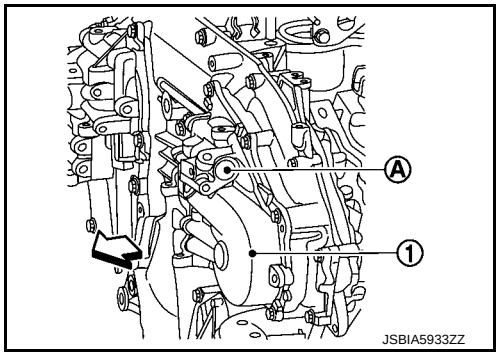

1 : Camshaft sprocket cover (bank 2)

⇦ : Engine front

WARNING:
Be careful not to touch rotating parts. (drive belt, and crankshaft pulley, etc.)
CAUTION:
- **Prevent splashing by using a shop cloth so as to prevent the worker from injury from engine oil and so as to prevent engine oil contamination.**
- **Prevent splashing by using a shop cloth so as to prevent engine oil from being splashed to engine and vehicle. Especially, be careful no to apply engine oil to rubber parts of drive belt, engine mounting insulator, etc. Wipe engine oil off immediately if it is splashed.**

5. Perform the following inspection if engine oil does not come out from intake valve timing control solenoid valve oil hole of the cylinder head.
   - Remove oil filter, and then clean it. Refer to LU-11, "Removal and Installation".
   - Clean oil groove between oil strainer and intake valve timing control solenoid valve. Refer to LU-3, "Engine Lubrication System Schematic".
6. Remove components between intake valve timing control solenoid valve and camshaft sprocket (INT), and then check each oil groove for clogging.
   - Clean oil groove if necessary. Refer to LU-3, "Engine Lubrication System Schematic".
7. After inspection, install removed parts in the reverse order.

Inspection for Leakage

The following are procedures for checking fluids leakage and lubricates leakage.
- Before starting engine, check oil/fluid levels including engine coolant and engine oil. If less than required quantity, fill to the specified level. Refer to MA-10, "Fluids and Lubricants".
- Use procedure below to check for fuel leakage.
- Turn ignition switch “ON” (with engine stopped). With fuel pressure applied to fuel piping, check for fuel leakage at connection points.
- Start engine. With engine speed increased, check again for fuel leakage at connection points.
- Run engine to check for unusual noise and vibration.

  NOTE:
  If hydraulic pressure inside timing chain tensioner drops after removal/installation, slack in the guide may generate a pounding noise during and just after engine start. However, this is normal. Noise will stop after hydraulic pressure rises.
- Warm up engine thoroughly to check there is no leakage of fuel, or any oil/fluids including engine oil and engine coolant.
- Bleed air from lines and hoses of applicable lines, such as in cooling system.
- After cooling down engine, again check oil/fluid levels including engine oil and engine coolant. Refill to the specified level, if necessary.

Summary of the inspection items:

Items		Before starting engine	Engine running	After engine stopped
Engine coolant		Level	Leakage	Level
Engine oil		Level	Leakage	Level
Transmission / transaxle fluid	AT & CVT Models	Leakage	Level / Leakage	Leakage
	MT Models	Level / Leakage	Leakage	Level / Leakage
Other oils and fluids*		Level	Leakage	Level
Fuel		Leakage	Leakage	Leakage
Exhaust gases		—	Leakage	—

*: Power steering fluid, brake fluid, etc.

cardiagn.com

CYLINDER HEAD

Exploded View

INFOID:0000000012409897

REMOVAL

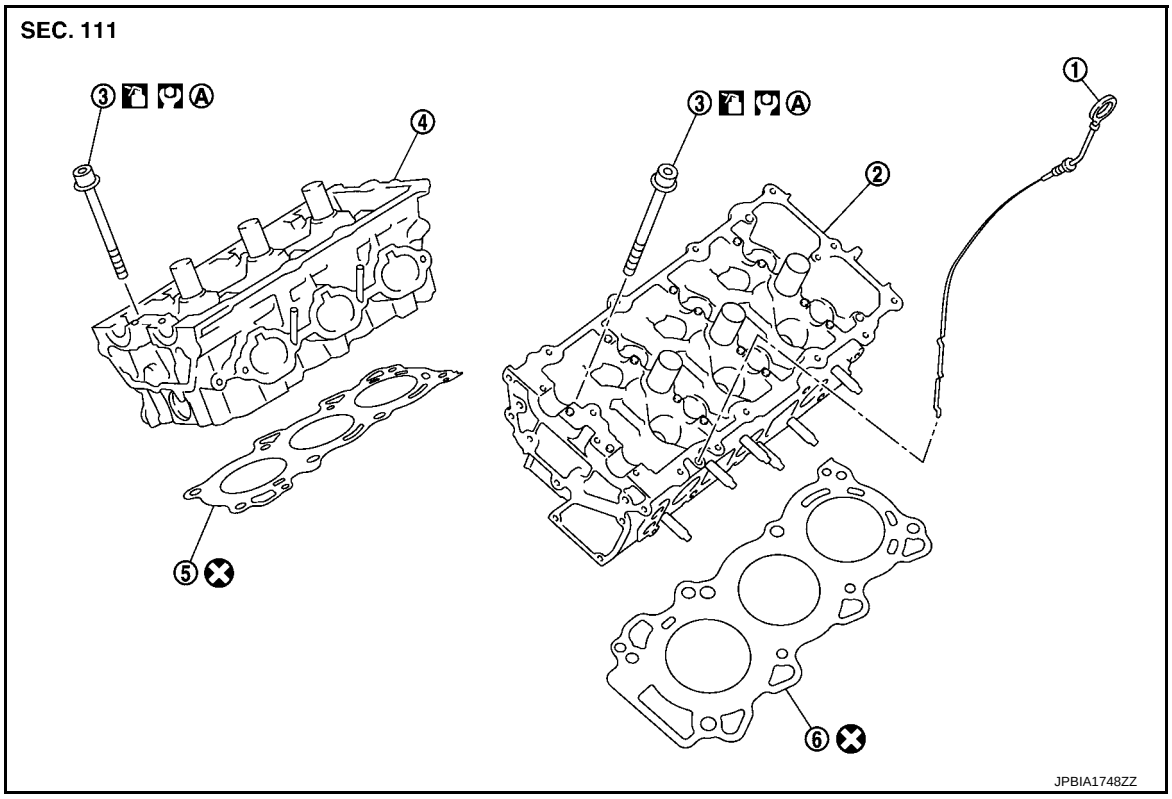

1. Oil level gauge
2. Cylinder head (bank 2)
3. Cylinder head bolt
4. Cylinder head (bank 1)
5. Cylinder head gasket (bank 1)
6. Cylinder head gasket (bank 2)

A. Comply with the assembly procedure when tightening. Refer to EM-97

: Always replace after every disassembly.

: N·m (kg-m, ft-lb)

: Should be lubricated with oil.

DISASSEMBLY

cardiagn.com

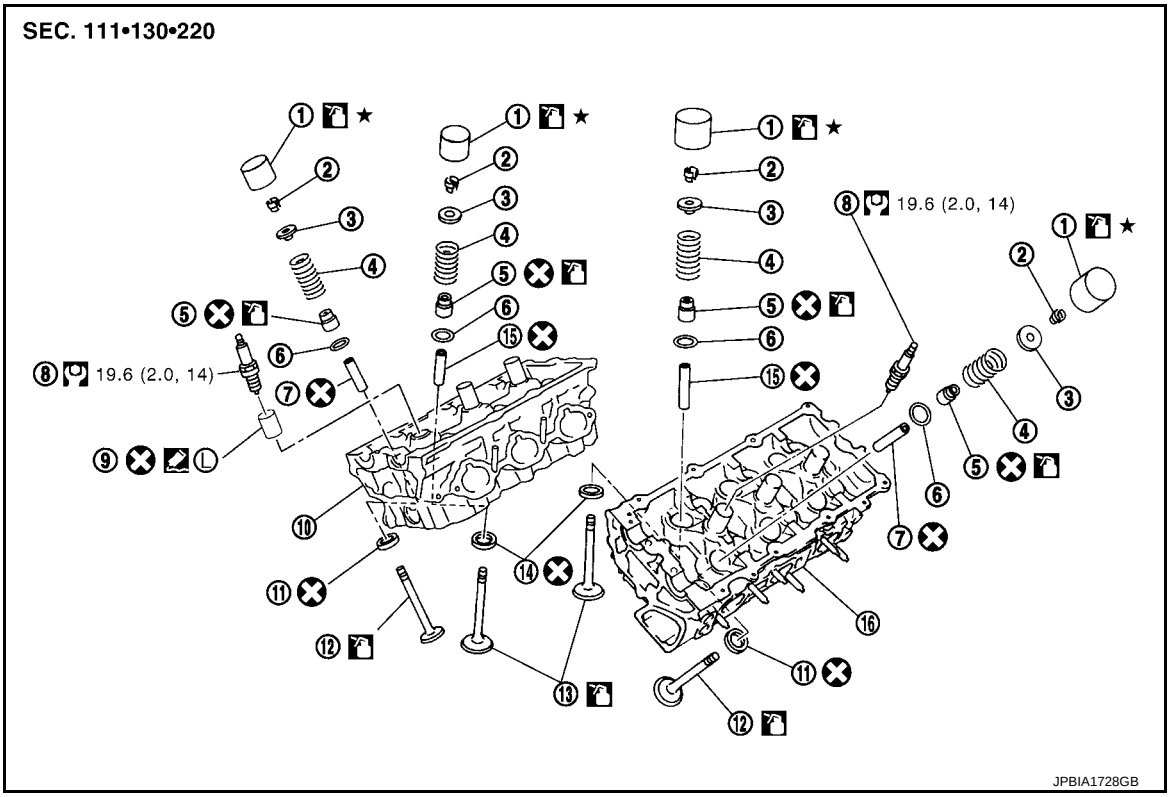

1. Valve lifter	2. Valve collet	3. Valve spring retainer
4. Valve spring	5. Valve oil seal	6. Valve spring seat
7. Valve guide (EXH)	8. Spark plug	9. Spark plug tube
10. Cylinder head (bank 1)	11. Valve seat (EXH)	12. Valve (EXH)
13. Valve (INT)	14. Valve seat (INT)	15. Valve guide (INT)
16. Cylinder head (bank 2)		

Ⓛ: Apply genuine high strength thread locking sealant or equivalent.

⊗ : Always replace after every disassembly.

: N·m (kg-m, ft-lb)

: Should be lubricated with oil.

★ : Select with proper thickness.

Removal and Installation

INFOID:0000000012409898

REMOVAL

1. Remove the following parts:
   - Oil level gauge
   - Intake manifold collector: Refer to EM-29, "Exploded View".
   - Rocker cover: Refer to EM-54, "Exploded View".
   - Fuel tube and fuel injector assembly: Refer to EM-49, "Exploded View".
   - Intake manifold: Refer to EM-32, "Exploded View".
   - Exhaust manifold: Refer to EM-34, "Exploded View".
   - Water inlet and thermostat assembly: Refer to CO-25, "Removal and Installation".
   - Water outlet, water connector, water bypass pipe, and heater pipe: Refer to CO-28, "Removal and Installation".
   - Fornt timing chain case, timing chain and rear timing chain case: Refer to EM-69, "Removal and Installation".
   - Camshaft: Refer to EM-87, "Exploded View".

cardiagn.com

2. Remove cylinder head bolts in the reverse order as shown in the figure with cylinder head bolt wrench (commercial service tool) and power tool to remove cylinder heads (bank 1 and bank 2).

A : Bank 1
B : Bank 2
⇦ : Engine front

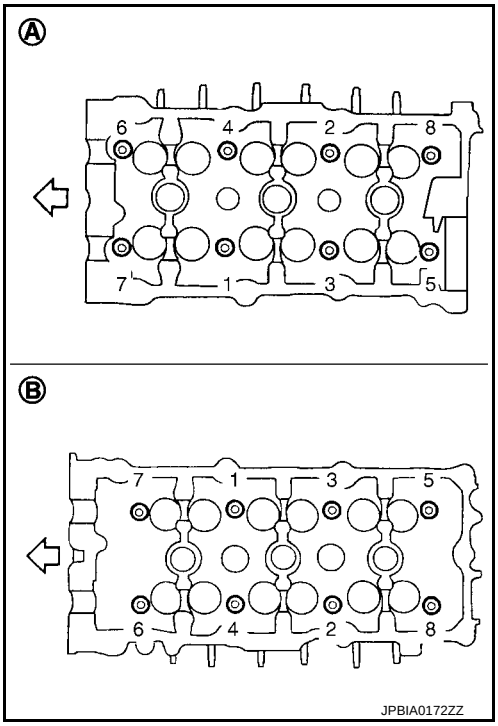

3. Remove cylinder head gaskets.

INSTALLATION

1. Turn crankshaft until No. 1 piston is set at TDC.
   - Crankshaft key (1) should line up with the bank 1 cylinder center line as shown in the figure.

⇦ : Bank 1 side

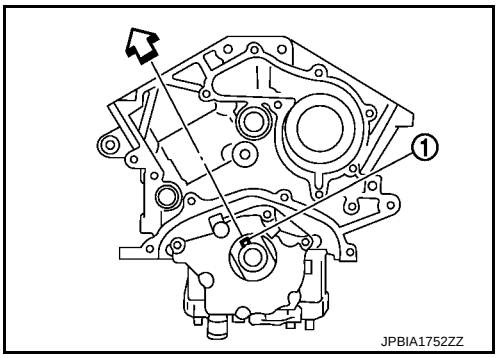

2. Install new cylinder head gaskets.

cardiagn.com

3. Install cylinder head follow the steps below to tighten cylinder head bolts in numerical order as shown in the figure with cylinder head bolts wrench (commercial service tool).

A : Bank 1
B : Bank 2
⇦ : Engine front

CAUTION:
- **If cylinder head bolts reused, check their outer diameters before installation. Refer to EM-104, "Inspection".**
- **Before installing cylinder head, inspect cylinder head distortion. Refer to EM-104, "Inspection".**

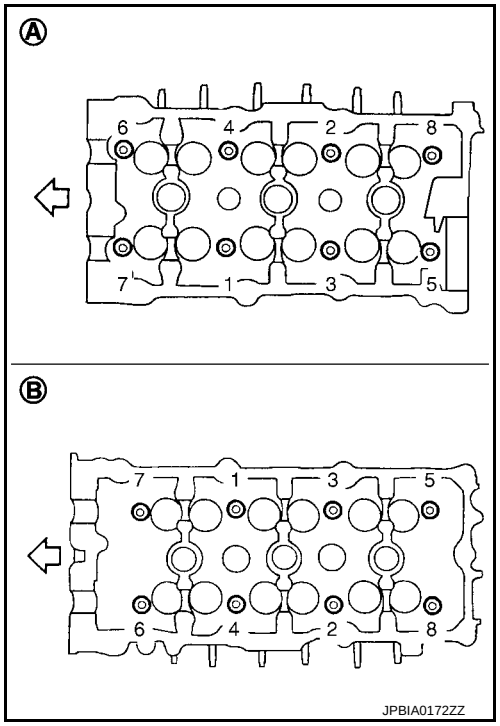

a. Apply new engine oil to threads and seat surfaces of cylinder head bolts.
b. Tighten all cylinder head bolts.

: 98.1 N·m (10 kg-m, 72 ft-lb)

c. Completely loosen all cylinder head bolts.

: 0 N·m (0 kg-m, 0 ft-lb)

CAUTION:
In step "c", loosen bolts in the reverse order of that indicated in the figure.

d. Tighten all cylinder head bolts.

: 39.2 N·m (4.0 kg-m, 29 ft-lb)

e. Turn all cylinder head bolts 103 degrees clockwise (angle tightening).

CAUTION:
Check the tightening angle by using the angle wrench [SST: KV10112100 (BT8653-A)] (A). Avoid judgment by visual inspection without.
- Check tightening angle indicated on the angle wrench indicator plate.

f. Turn all cylinder head bolts 103 degrees clockwise again (angle tightening).

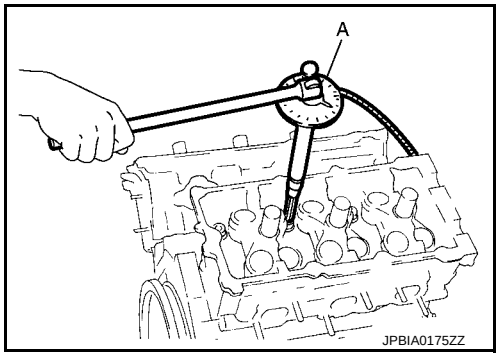

4. After installing cylinder head, measure distance between front end faces of cylinder block and cylinder head (bank 1 and bank 2).

Standard : 14.1 - 14.9 mm (0.555 - 0.587 in)

- If measured value is out of the standard, reinstall cylinder head.

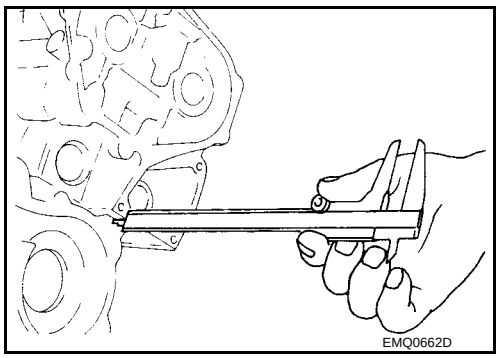

5. Install in the reverse order of removal after this step.

cardiagn.com

Disassembly and Assembly

INFOID:0000000012409899

DISASSEMBLY

1. Remove spark plug with spark plug wrench (commercial service tool).
2. Remove valve lifter.
   - Identify installation positions, and store them without mixing them up.
3. Remove valve collet.
   - Compress valve spring with the valve spring compressor [SST: KV10116200 (J-26336-A)] (A), the attachment [SST: KV10115900 (J-26336-20)] (C) and the adapter [SST: KV10109220 (—)] (B). Remove valve collet with a magnet hand.

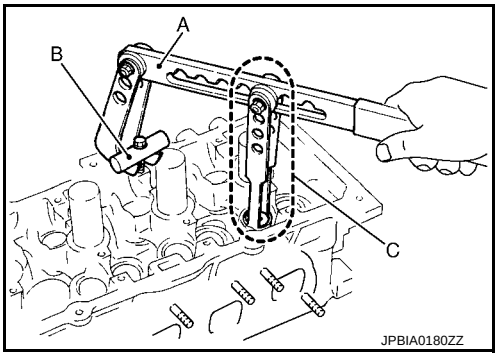

CAUTION:
- **Never damage valve lifter holes.**
- **Fit the attachment [SST: KV10115900] (A) in the center of valve spring retainer to press it.**

1 : Valve spring retainer

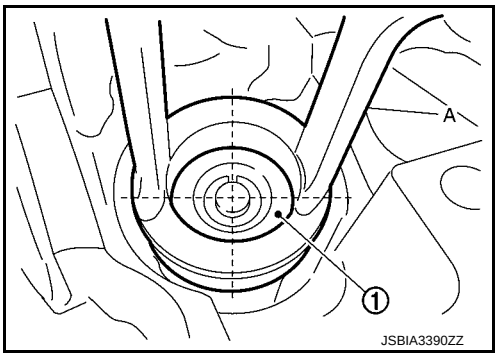

4. Remove valve spring retainer, valve spring and valve spring seat.
5. Push valve stem to combustion chamber side, and remove valve.
   - Identify installation positions, and store them without mixing them up.
6. Remove valve oil seal with the valve oil seal puller [SST: KV10107902 (J-38959)] (A).

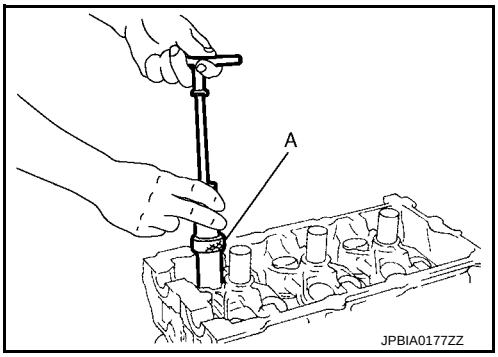

7. Remove valve seat, if valve seat must be replaced.
   - Bore out old seat until it collapses. Boring should not continue beyond the bottom face of the seat recess in cylinder head. Set the machine depth stop to ensure this. Refer to EM-136, "Cylinder Head".

   CAUTION:
   Prevent to scratch cylinder head by excessive boring.
8. Remove valve guide, if valve guide must be replaced.

cardiagn.com

a. To remove valve guide, heat cylinder head to 110 to 130°C (230 to 266°F) by soaking in heated oil (A).

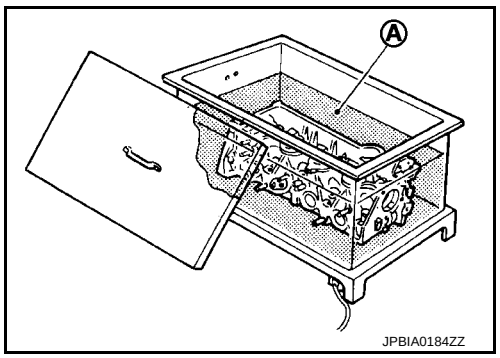

b. Drive out valve guide with a press [under a 20 kN (2 ton, 2.2 US ton, 2.0 Imp ton) pressure] or a hammer and the valve guide drift (commercial service tool).

WARNING:
Cylinder head contains heat. When working, wear protective equipment to avoid getting burned.

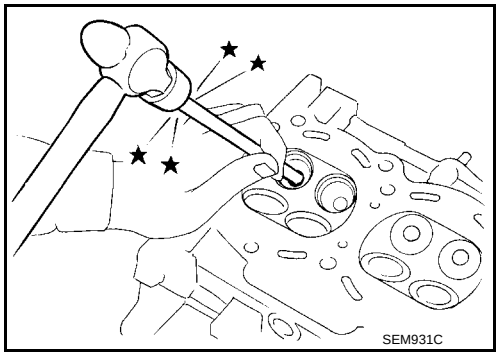

9. Remove spark plug tube if necessary.
   - Using a pliers, pull spark plug tube out of cylinder head.

   CAUTION:
   - **Take care not to damage cylinder head.**
   - **Once removed, spark plug tube will be deformed and cannot be reused. Never remove it unless absolutely necessary.**

ASSEMBLY

1. If valve guide is removed in step 8 (DISASSEMBLY), install it. Replace with oversized [0.2 mm (0.008 in)] valve guide.

a. Using the valve guide reamer (commercial service tool) (A), ream cylinder head valve guide hole.

Valve guide hole diameter (for service parts):

Intake and exhaust

: Refer to EM-136, "Cylinder Head".

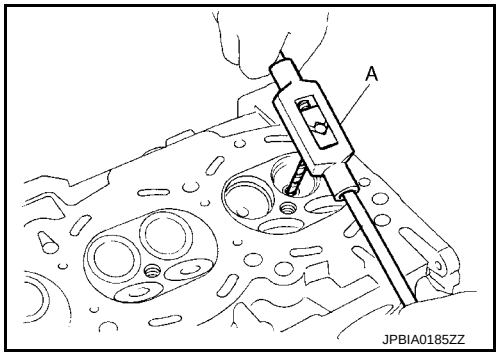

b. Heat cylinder head to 110 to 130°C (230 to 266°F) by soaking in heated oil (A).

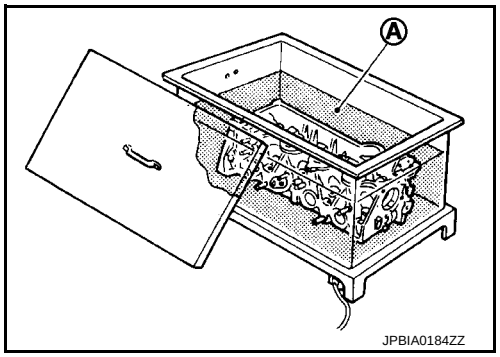

cardiagn.com

c. Using the valve guide drift (commercial service tool), press valve guide from camshaft side to the dimensions as in the figure.

Projection (A)

Intake and exhaust

: Refer to EM-136, "Cylinder Head".

WARNING:
Cylinder head contains heat. When working, wear protective equipment to avoid getting burned.

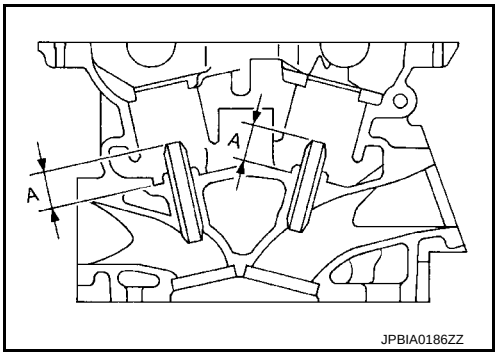

d. Using the valve guide reamer (commercial service tool) (A), apply reamer finish to valve guide.

Standard (Intake and exhaust) **: Refer to EM-136, "Cylinder Head".**

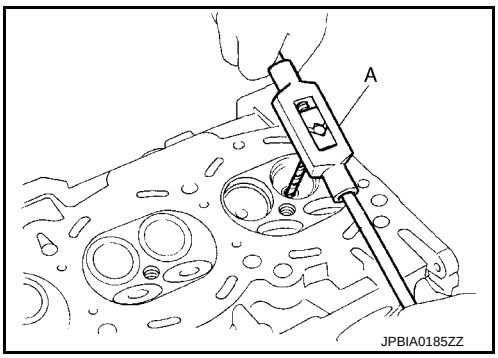

2. If valve seat is removed in step 7 (DISASSEMBLY), install it. Replace with oversize [0.5 mm (0.020 in)] valve seat.

a. Ream cylinder head recess diameter (a) for service valve seat.

Oversize (Intake and exhaust) **: Refer to EM-136, "Cylinder Head".**

- Be sure to ream in circles concentric to valve guide center. This will enable valve to fit correctly.

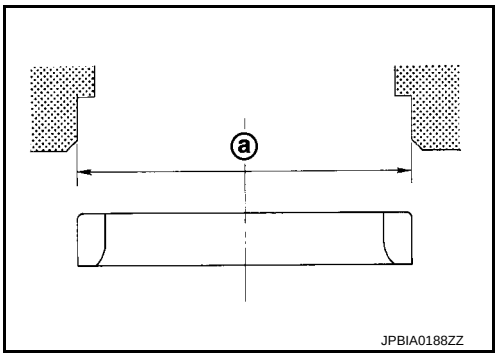

b. Heat cylinder head to 110 to 130°C (230 to 266°F) by soaking in heated oil (A).

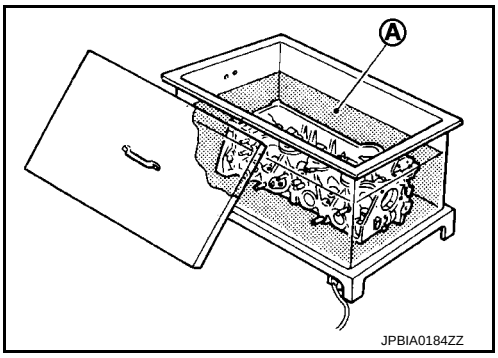

c. Provide valve seats cooled well with dry ice. Force fit valve seat into cylinder head.

WARNING:
Cylinder head contains heat. When working, wear protective equipment to avoid getting burned.
CAUTION:
Avoid directly touching cold valve seats.

cardiagn.com

d. Using the valve seat cutter set (commercial service tool) or valve seat grinder, finish seat to the specified dimensions. Refer to EM-136, "Cylinder Head".

CAUTION:
When using the valve seat cutter, firmly grip cutter handle with both hands. Then, press on the contacting surface all around the circumference to cut in a single drive. Improper pressure on with cutter or cutting many different times may result in stage valve seat.

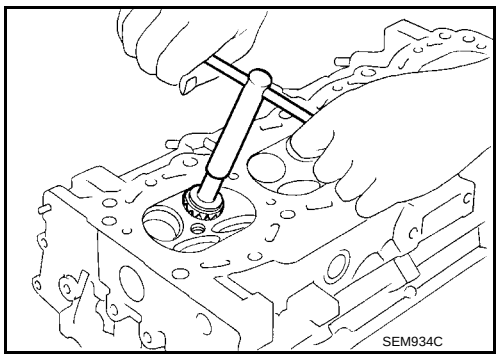

e. Using compound, grind to adjust valve fitting.

f. Check again for normal contact. Refer to EM-104, "Inspection".

3. Install new valve oil seals as follows:

a. Apply new engine oil on valve oil seal joint and seal lip.

b. Install with the valve oil seal drift [SST: KV10115600 (J-38958)] (A) press fit valve seal to height (b) shown in the figure.

NOTE:
Dimension: Height measured before valve spring seat installation.

Intake and exhaust : 14.3 - 14.9 mm (0.563 - 0.587 in)

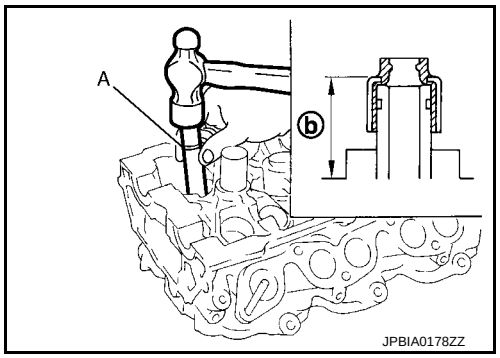

4. Install valve spring seat.

5. Install valve.
   - Install it in the original position.

   NOTE:
   Larger diameter valves are for intake side.

6. Install valve spring.
   - Install smaller pitch (valve spring seat side) to cylinder head side (A).
   - Confirm identification color of valve spring.

Intake and Exhaust : White

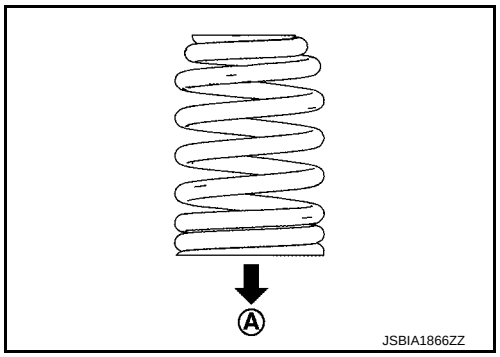

7. Install valve spring retainer.

8. Install valve collet.

cardiagn.com

- Compress valve spring with the valve spring compressor [SST: KV10116200 (J-26336-A)] (A), the attachment [SST: KV10115900 (J-26336-20)] (C) and the adapter [SST: KV10109220 (—)] (B). Install valve collet with a magnet hand.

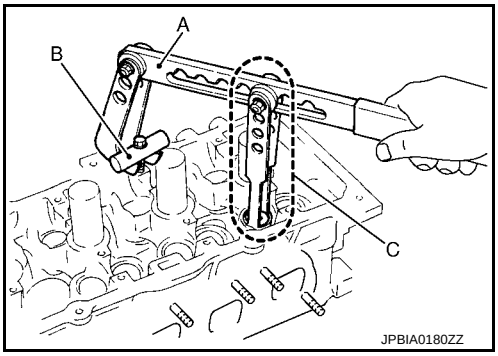

CAUTION:
- **Be careful not to damage valve lifter holes.**
- **Fit the attachment [SST: KV10115900 (J-26336-20)] in the center of valve spring retainer to press it.**

1 : Valve spring retainer
A : Attachment

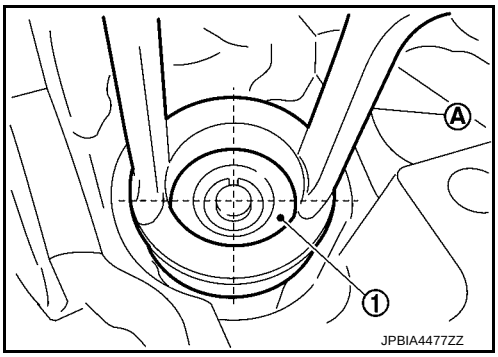

- Tap valve stem edge lightly with plastic hammer after installation to check its installed condition.

9. Install valve lifter.
   - Install it in the original position.
10. Install spark plug tube.
   - Press-fit spark plug tube as follows:

a. Remove old liquid gasket adhering to cylinder head mounting hole.

b. Apply sealant to area within approximately 12 mm (0.47 in) from edge of spark plug tube press-fit side. **Use genuine high strength thread locking sealant or equivalent. Refer to GI-22, "Recommended Chemical Products and Sealants".**

c. Using a drift, press-fit spark plug tube so that its height (A) is as specified in the figure.

B : Genuine high strength thread locking sealant application area

Standard press-fit height: 37.7 - 38.7 mm (1.484 - 1.524 in)

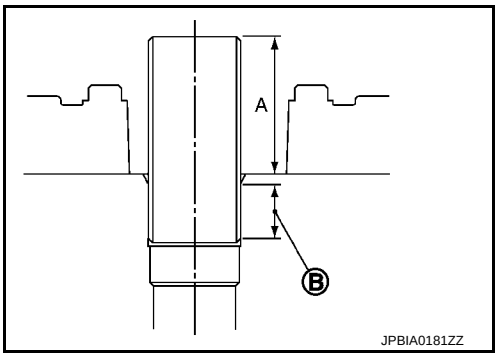

CAUTION:
- **When press-fitting, take care not to deform spark plug tube.**
- **After press-fitting, wipe off liquid gasket protruding onto cylinder-head upper face.**

11. Install spark plug with the spark plug wrench (commercial service tool).

Inspection

INFOID:0000000012409900

INSPECTION AFTER REMOVAL

Cylinder Head Bolts Outer Diameter

cardiagn.com

- Cylinder head bolts are tightened by plastic zone tightening method. Whenever the size difference between (C) and (B) exceeds the limit, replace them with new one.

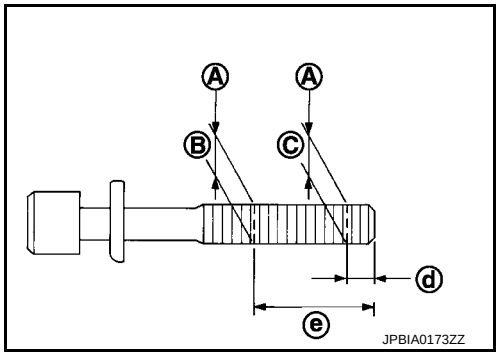

A : Measuring point
d : 11 mm (0.43 in)
e : 48 mm (1.89 in)

Limit [(C) - (B)] : 0.11 mm (0.0043 in)

- If reduction of outer diameter appears in a position other than (B), use it as (B) point.

Cylinder Head Distortion

NOTE:

When performing this inspection, cylinder block distortion should be also checking. Refer to EM-117, "Inspection".

1. Using a scraper, wipe off oil, scale, gasket, sealant and carbon deposits from surface of cylinder head.
   CAUTION:
   Never allow gasket fragments to enter engine oil or engine coolant passages.
2. At each of several locations on bottom surface of cylinder head, measure the distortion in six directions (A), (B), (C), (D), (E), and (F).

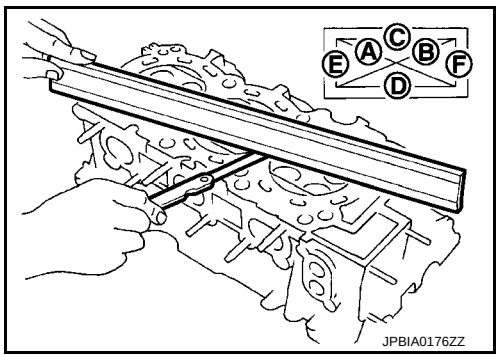

Limit : Refer to EM-136, "Cylinder Head".

- If it exceeds the limit, replace cylinder head.

INSPECTION AFTER DISASSEMBLY

Valve Dimensions

- Check the dimensions of each valve. For the dimensions, refer to EM-136, "Cylinder Head".
- If dimensions are out of the standard, replace valve and check valve seat contact. Refer to “Valve Seat Contact”.

Valve Guide Clearance

Valve Stem Diameter

- Measure the diameter of valve stem with micrometer (A).

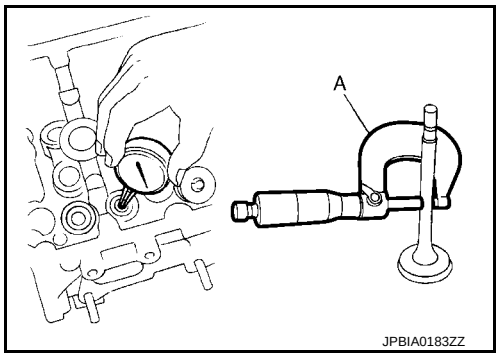

Standard (Intake and exhaust) : Refer to EM-136, "Cylinder Head".

Valve Guide Inner Diameter

- Measure the inner diameter of valve guide with bore gauge.

Standard (Intake and exhaust) : Refer to EM-136, "Cylinder Head".

Valve Guide Clearance

- (Valve guide clearance) = (Valve guide inner diameter) – (Valve stem diameter)

Valve guide clearance Standard and limit (Intake and exhaust) : Refer to EM-136, "Cylinder Head".

- If the calculated value exceeds the limit, replace valve and/or valve guide. When valve guide must be replaced, refer to EM-100, "Disassembly and Assembly".

cardiagn.com

Valve Seat Contact

- After confirming that the dimensions of valve guides and valves are within the specifications, perform this procedure.
- Apply prussian blue (or white lead) onto contacting surface of valve seat to check the condition of the valve contact on the surface.
- Check if the contact area band is continuous all around the circumference.
- If not, grind to adjust valve fitting and check again. If the contacting surface still has “NG” conditions (B) even after the recheck, replace valve seat. Refer to EM-100, "Disassembly and Assembly".

A : OK

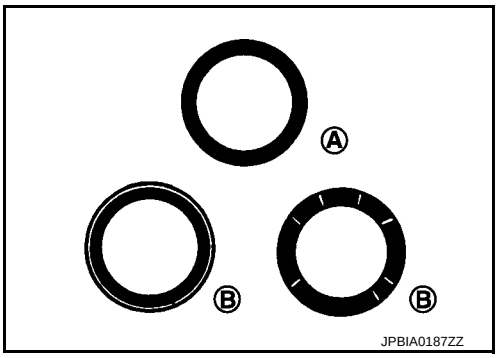

Valve Spring Squareness

- Set try square (A) along the side of valve spring and rotate the spring. Measure the maximum clearance (d) between the top of valve spring and try square.

B : Contact
C : V-block

Limit : Refer to EM-136, "Cylinder Head".

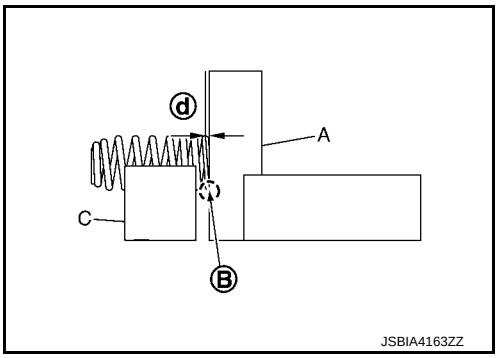

- If it exceeds the limit, replace valve spring (with valve spring seat).
- Replace valve spring (EXH). Refer to EM-96, "Exploded View". (Exhaust side)
- Replace VVEL ladder assembly and cylinder head assembly. Refer to EM-96, "Exploded View". (Intake side)

NOTE:
Since the valve spring (INT) cannot be replaced by the piece, VVEL ladder assembly and cylinder head assembly replacement are required.

Valve Spring Dimensions and Valve Spring Pressure Load

- Check the valve spring pressure at specified spring height.

Standard (Intake and exhaust)	
Free height	
Installation height	**: Refer to EM-136, "Cylinder Head".**
Installation load	
Height during valve open	
Load with valve open	

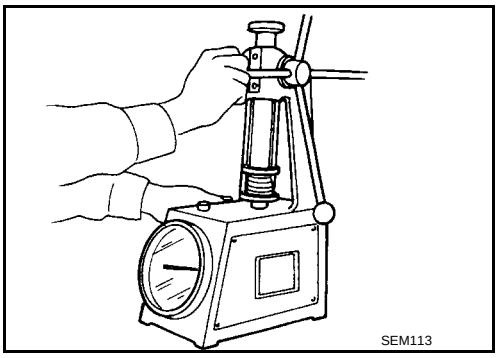

- If the installation load or load with valve open is out of the standard, replace valve spring.

INSPECTION AFTER INSTALLATION

Inspection for Leakage

The following are procedures for checking fluids leakage, lubricates leakage, and exhaust gases leakage.

- Before starting engine, check oil/fluid levels including engine coolant and engine oil. If less than required quantity, fill to the specified level. Refer to MA-10, "Fluids and Lubricants".
- Use procedure below to check for fuel leakage.
- Turn ignition switch “ON” (with engine stopped). With fuel pressure applied to fuel piping, check for fuel leakage at connection points.
- Start engine. With engine speed increased, check again for fuel leakage at connection points.
- Run engine to check for unusual noise and vibration.

cardiagn.com

- Warm up engine thoroughly to check there is no leakage of fuel, exhaust gases, or any oil/fluids including engine oil and engine coolant.
- Bleed air from lines and hoses of applicable lines, such as in cooling system.
- After cooling down engine, again check oil/fluid levels including engine oil and engine coolant. Refill to the specified level, if necessary.

Summary of the inspection items:

Items		Before starting engine	Engine running	After engine stopped
Engine coolant		Level	Leakage	Level
Engine oil		Level	Leakage	Level
Transmission / transaxle fluid	AT & CVT Models	Leakage	Level / Leakage	Leakage
	MT Models	Level / Leakage	Leakage	Level / Leakage
Other oils and fluids*		Level	Leakage	Level
Fuel		Leakage	Leakage	Leakage
Exhaust gases		—	Leakage	—

*: Power steering fluid, brake fluid, etc.

cardiagn.com

CYLINDER BLOCK

Exploded View

INFOID:0000000012409901

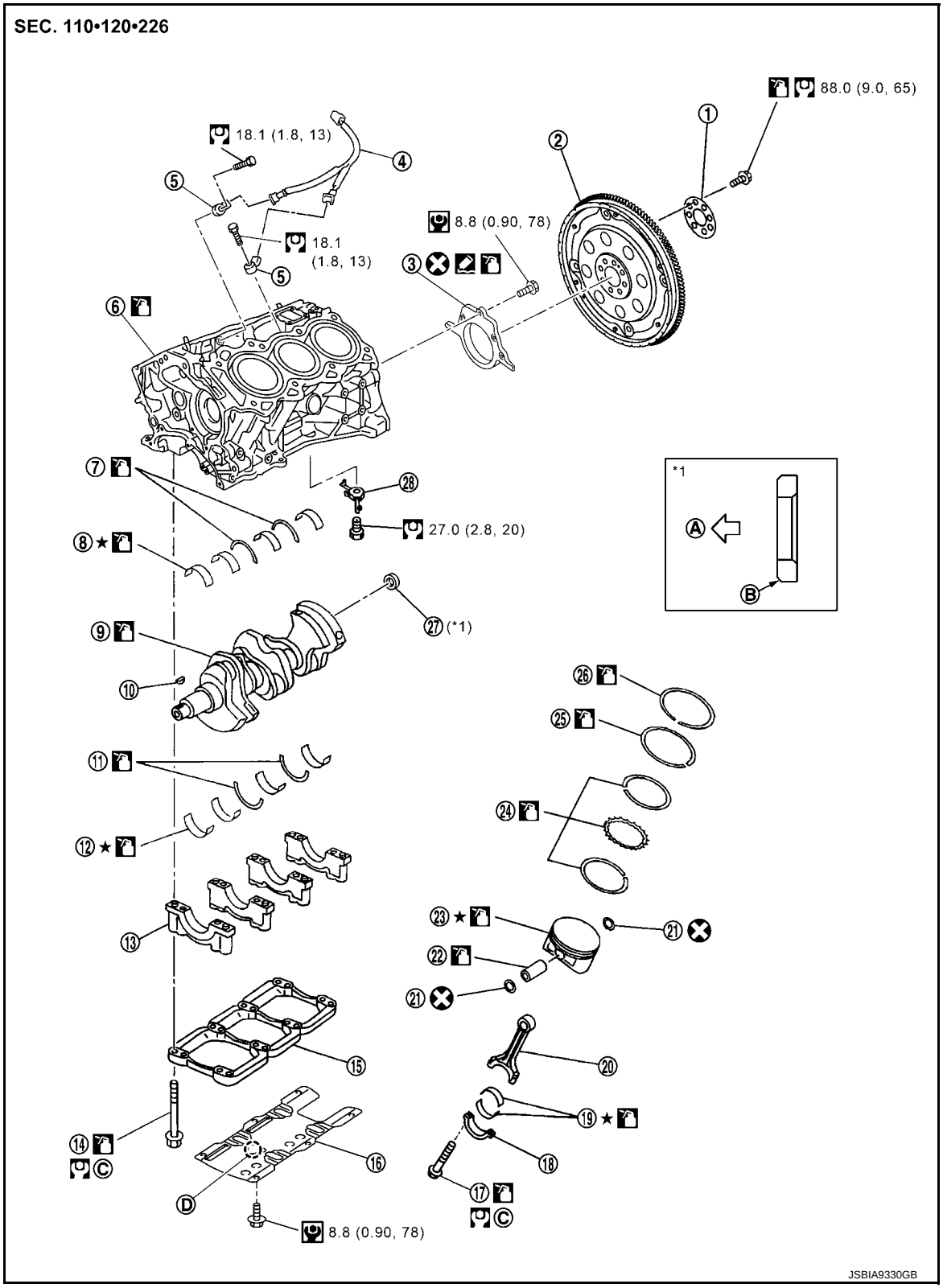

1. Reinforcement plate
2. Drive plate
3. Rear oil seal retainer
4. Sub harness
5. Knock sensor
6. Cylinder block
7. Thrust bearing (upper)
8. Main bearing (upper)
9. Crankshaft

cardiagn.com

10. Crankshaft key	11. Thrust bearing (lower)	12. Main bearing (lower)
13. Main bearing cap	14. Main bearing cap bolt	15. Main bearing beam
16. Baffle plate	17. Connecting rod bolt	18. Connecting rod bearing cap
19. Connecting rod bearing	20. Connecting rod	21. Snap ring
22. Piston pin	23. Piston	24. Oil ring
25. Second ring	26. Top ring	27. Pilot converter
28. Oil jet		
A. Crankshaft side	B. Chamfered	C. Comply with the installation procedure when tightening. Refer to EM-109
D. Front mark		

: Always replace after every disassembly.

: N·m (kg-m, ft-lb)

: N·m (kg-m, in-lb)

: Should be lubricated with oil.

: Sealing point

★ : Select with proper thickness.

Disassembly and Assembly

INFOID:0000000012409902

DISASSEMBLY

1. Remove the following parts:
   - Intake manifold collector: Refer to EM-29, "Exploded View".
   - Intake manifold: Refer to EM-32, "Exploded View".
   - Oil pans (lower and upper): Refer to EM-39, "Exploded View".
   - Front and rear timing chain case: Refer to EM-68, "Exploded View".
   - Cylinder head: Refer to EM-96, "Exploded View".
2. Remove knock sensor.
   CAUTION:
   Carefully handle sensor avoiding shocks.
3. Remove rear oil seal retainer.
   - Remove by inserting screwdriver between main bearing cap and rear oil seal retainer.

   CAUTION:
   If rear oil seal retainer is removed, replace it with new one.
   NOTE:
   Regard both rear oil seal and retainer as an assembly.
4. Remove baffle plate from main bearing beam.
5. Remove piston and connecting rod assembly with the following procedure:
   - Before removing piston and connecting rod assembly, check the connecting rod side clearance. Refer to EM-117, "Inspection".

   CAUTION:
   Be careful not to drop connecting rod bearing, and to scratch the surface.

a. Position crankshaft pin corresponding to connecting rod to be removed onto the bottom dead center.
b. Remove connecting rod bearing cap.

cardiagn.com

c. Using a hammer handle or similar tool, push piston and connecting rod assembly out to the cylinder head side.
CAUTION:
Be careful not to damage the cylinder wall and crankshaft pin, resulting from an interference of the connecting rod big end.

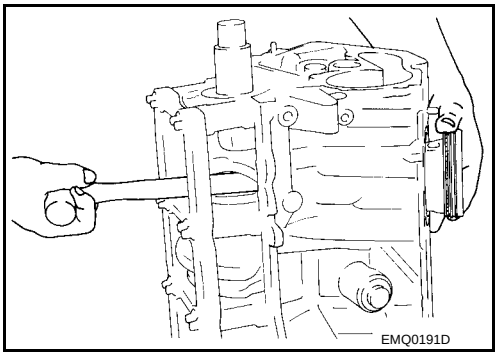

6. Remove connecting rod bearings from connecting rod and connecting rod bearing cap.
CAUTION:
- **Be careful not to drop connecting rod bearing, and to scratch the surface.**
- **Identify installation positions, and store them without mixing them up.**

7. Remove piston rings form piston.
- Before removing piston rings, check the piston ring side clearance. Refer to EM-117, "Inspection".
- Use a piston ring expander (commercial service tool) (A).

CAUTION:
- **When removing piston rings, be careful not to damage piston.**
- **Be careful not to damage piston rings by expanding them excessively.**

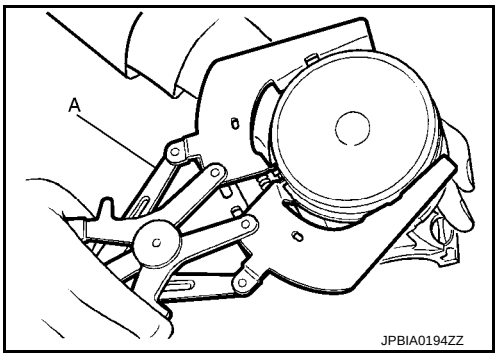

8. Remove piston from connecting rod as follows:

a. Using a snap ring pliers (A), remove snap rings.

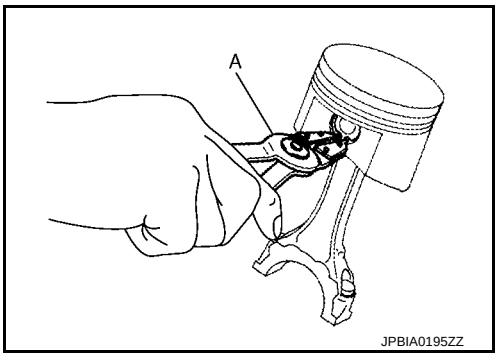

b. Heat piston to 60 to 70°C (140 to 158°F) with an industrial use drier (A) or equivalent.

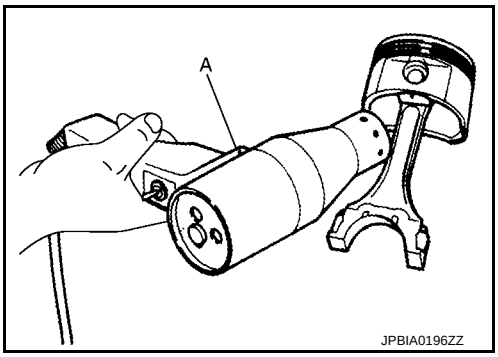

cardiagn.com

c. Push out piston pin with stick of outer diameter approximately 20 mm (0.79 in).

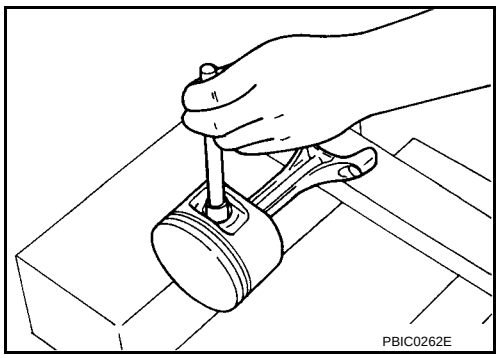

9. Remove main bearing cap bolts.
NOTE:
- Before loosening main bearing cap bolts, measure the crankshaft end play. Refer to EM-117, "Inspection".
- Loosen main bearing cap bolts in the reverse order shown in the figure in several different steps.

⇦ : Engine front

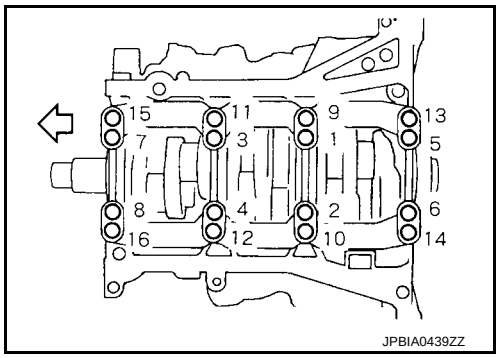

10. Remove main bearing beam.

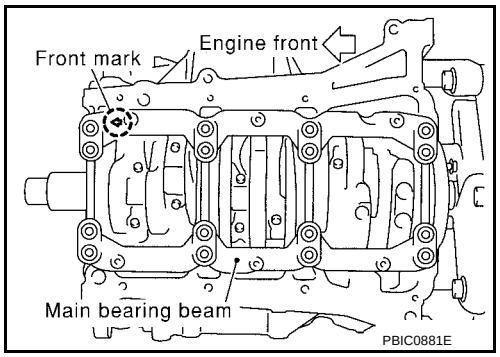

11. Remove main bearing caps.
CAUTION:
Be careful not to drop main bearing, and to scratch the surface.
- Using main bearing cap bolts, remove main bearing cap while shaking it back-and-forth.

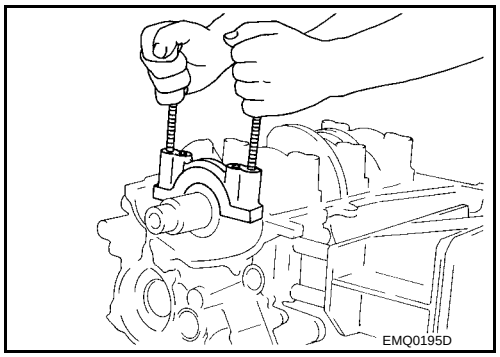

12. Remove crankshaft.
13. Remove main bearings and thrust bearings from cylinder block and main bearing caps.
CAUTION:
- **Be careful not to drop main bearing, and to scratch the surface.**
- **Identify installation positions, and store them without mixing them up.**
14. Remove oil jet.

ASSEMBLY

cardiagn.com

CAUTION:
Do not reuse washers.

1. Fully air-blow engine coolant and engine oil passages in cylinder block, cylinder bore and crankcase to remove any foreign material.
   CAUTION:
   Use a goggles to protect your eye.
2. Install each plug to cylinder block as shown in the figure.

   B : Water drain plug

   CAUTION:
   Do not reuse washers.
   - Apply sealant to the thread of water drain plug (A).
     Use Anaerobic Liquid Gasket or equivalent. Refer to GI-22, "Recommended Chemical Products and Sealants".
   - Apply sealant to the thread of connector bolt (D).
     Use Genuine RTV Silicone Sealant or equivalent. Refer to GI-22, "Recommended Chemical Products and Sealants".
   - Apply sealant to the thread of plug (C).
     Use genuine high strength thread locking sealant or equivalent. Refer to GI-22, "Recommended Chemical Products and Sealants".
   - Replace washers with new one.

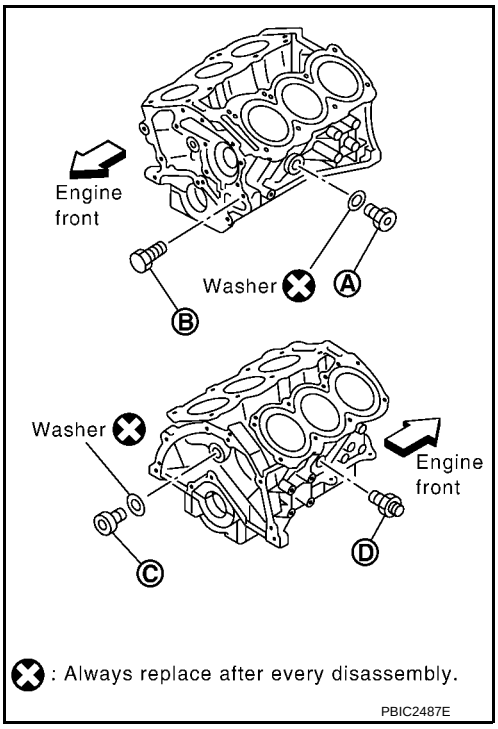

   - Tighten each plug and connector bolt as specified below.

Part	Washer	Tightening torque
A	Yes	62.0 N·m (6.3 kg-m, 46 ft-lb)
B	No	9.8 N·m (1.0 kg-m, 87 in-lb)
C	Yes	62.0 N·m (6.3 kg-m, 46 ft-lb)
D	No	39.2 N·m (4.0 kg-m, 29 ft-lb)

3. Install oil jet.
   - Insert oil jet dowel pin (A) into cylinder block dowel pin hole, and tighten mounting bolts.

   ⇦ : Engine front

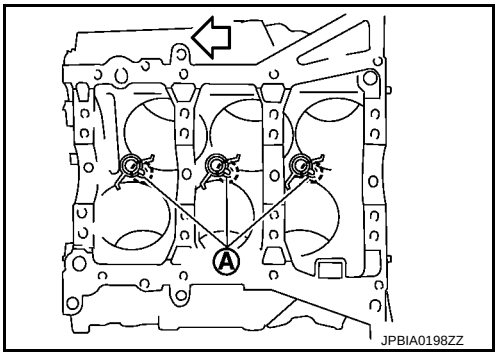

4. Install main bearings and thrust bearings as follows:
   CAUTION:
   Be careful not to drop main bearing, and to scratch the surface.

a. Remove dust, dirt, and engine oil on bearing mating surfaces of cylinder block and main bearing caps.

cardiagn.com

b. Install thrust bearings (1) to the both sides of the No. 3 journal housing on cylinder block and main bearing cap.

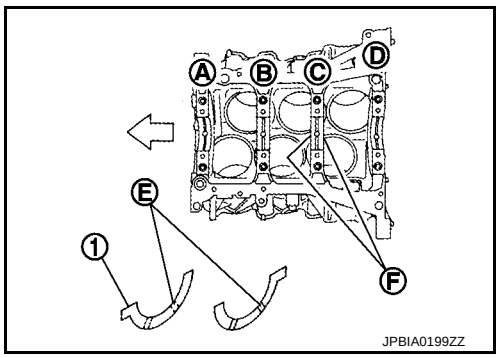

A : No. 1
B : No. 2
C : No. 3
D : No. 4
F : Thrust bearing installation position
⇦ : Engine front

- Install thrust bearings with the oil groove (E) facing crankshaft arm (outside).
- Install thrust bearing with a projection on one end on cylinder block, and thrust bearing with a projection at center on main bearing cap. Align each projection with mating notch.

c. Install main bearings paying attention to the direction.
- Main bearing with oil hole (B) and groove (C) goes on cylinder block. The one without them goes on main bearing cap.

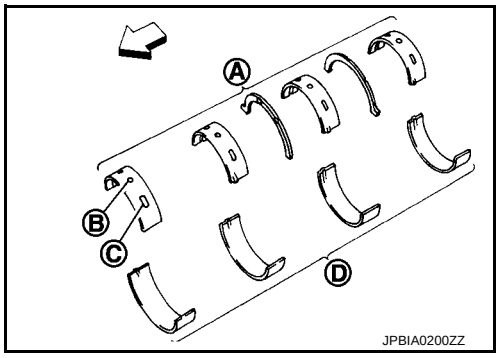

A : Cylinder block side
D : Main bearing cap side
⇦ : Engine front

- Before installing main bearings, apply engine oil to the bearing surface (inside). Do not apply engine oil to the back surface, but thoroughly clean it.
- When installing, align main bearing stopper protrusion to cut-out of cylinder block and main bearing caps.
- Ensure the oil holes on cylinder block and those on the corresponding bearing are aligned.

5. Install crankshaft to cylinder block.
- While turning crankshaft by hand, check that it turns smoothly.

6. Install main bearing caps.
- Main bearing caps are identified by identification mark cast on them. For installation, face front mark (E) to front side.

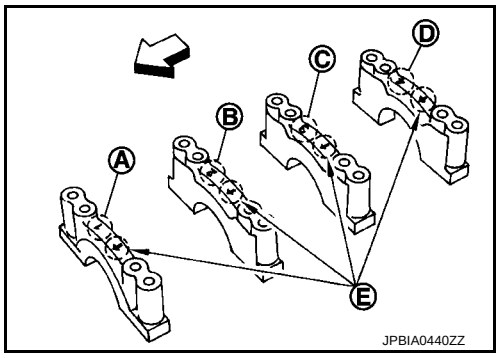

A : No. 1
B : No. 2
C : No. 3
D : No. 4
⇦ : Engine front

NOTE:
Main bearing cap cannot be replaced as a single part, because it is machined together with cylinder block.

7. Install main bearing beam.
- Install main bearing beam with front mark facing downward (oil pan side).
- Install main bearing beam with front mark facing front of the engine.

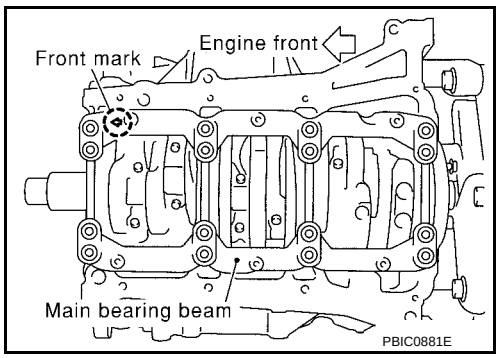

cardiagn.com

8. Install main bearing cap bolts in numerical order as shown in the figure as follows:

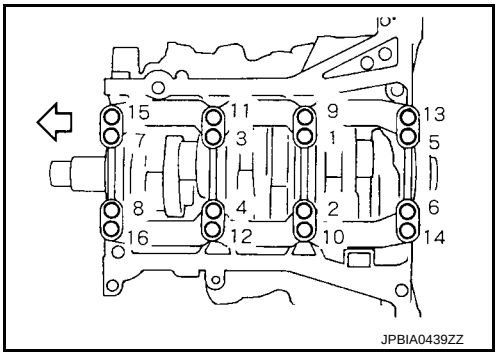

⇦ : Engine front

a. Inspect the outer diameter of main bearing cap bolt. Refer to EM-117, "Inspection".

b. Apply new engine oil to threads and seat surfaces of main bearing cap bolts.

c. Tighten main bearing cap bolts in several different steps.

: 35.3 N·m (3.6 kg-m, 26 ft-lb)

d. Turn all main bearing cap bolts 90 degrees clockwise (angle tightening).

CAUTION:

Use the angle wrench [SST: KV10112100 (BT8653-A)] to check tightening angle. Never make judgment by visual inspection.

- After installing main bearing cap bolts, check that crankshaft can be rotated smoothly by hand.
- Check the crankshaft end play. Refer to EM-117, "Inspection".

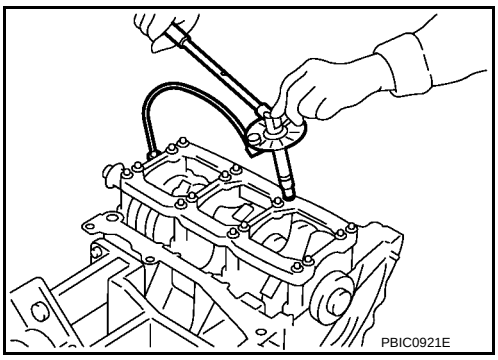

9. Install piston to connecting rod as follows:

a. Using snap ring pliers, install new snap ring to the groove of piston rear side.
- Insert it fully into groove to install.

b. Install piston to connecting rod.
- Using an industrial drier or similar tool, heat piston until piston pin can be pushed in by hand without excess force [approximately 60 to 70°C (140 to 158°F)]. From the front to the rear, insert piston pin into piston and connecting rod.
- Assemble so that the front mark on the piston crown and the cylinder number on connecting rod are positioned as shown in the figure.

c. Install new snap ring to the groove of the piston front side.
- Insert it fully into groove to install.
- After installing, check that connecting rod moves smoothly.

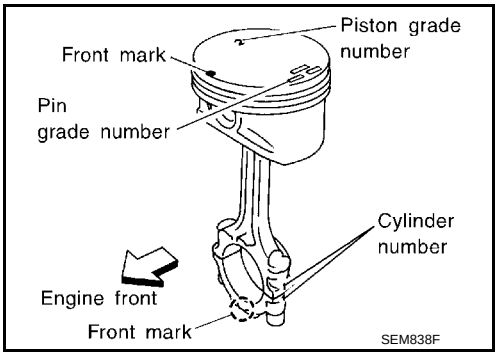

10. Using a piston ring expander (commercial service tool) (A), install piston rings.

CAUTION:

- **When installing piston rings, be careful not to damage piston.**
- **Be careful not to damage piston rings by expending them excessively.**

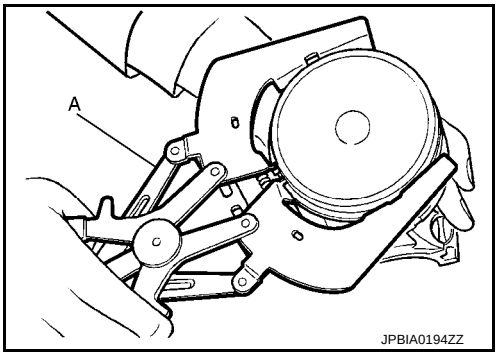

cardiagn.com

- If there is stamped mark on ring, mount it with marked side up.
  NOTE:
  If there is no stamp on ring, no specific orientation is required for installation.

  Stamped mark:
  Top ring (A) : —
  Second ring (B) : 2 R

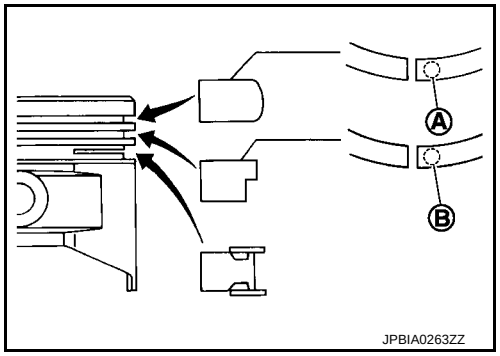

- Position each ring with the gap as shown in the figure referring to the piston front mark (D).

  C : Top ring gap
  E : Oil ring upper or lower rail gap (either of then)
  F : Second ring and oil ring spacer gap
  a : 90 degrees
  b : 45 degrees

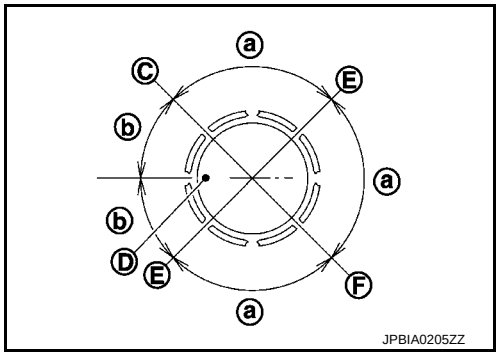

- Check the piston rings side clearance. Refer to EM-117, "Inspection".

11. Install connecting rod bearings to connecting rod and connecting rod bearing cap.
    CAUTION:
    Be careful not to drop connecting rod bearing, and to scratch the surface.
    - Before installing connecting rod bearings, apply engine oil to the bearing surface (inside). Do not apply engine oil to the back surface, but thoroughly clean it.
    - When installing, align connecting rod bearing stopper protrusion (B) with cutout (C) of connecting rod and connecting rod bearing cap to install.
    - Ensure the oil hole (A) on connecting rod and that on the corresponding bearing are aligned.

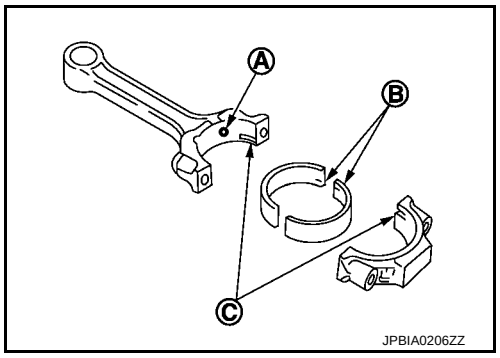

12. Install piston and connecting rod assembly to crankshaft.
    - Position crankshaft pin corresponding to connecting rod to be installed onto the bottom dead center.
    - Apply engine oil sufficiently to the cylinder bore, piston and crankshaft pin journal.
    - Match the cylinder position with the cylinder number on connecting rod to install.
    - Be sure that front mark on piston crown is facing front of engine.
    - Using a piston ring compressor [SST: EM03470000 (J-8037)] (A) or suitable tool, install piston with the front mark on the piston crown facing the front of the engine.

    CAUTION:
    Be careful not to damage the cylinder wall and crankshaft pin, resulting from an interference of the connecting rod big end.

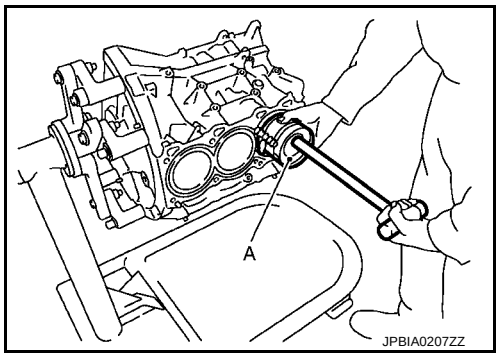

cardiagn.com

13. Install connecting rod bearing cap.
    - Match the stamped cylinder number marks on connecting rod with those on connecting rod bearing cap to install.

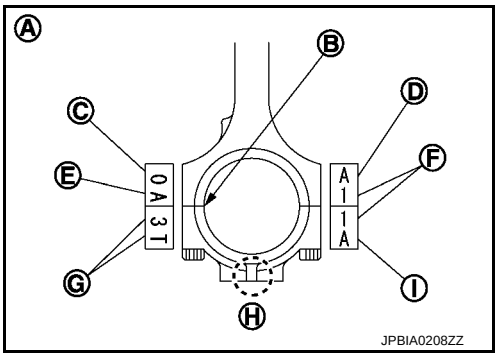

A : Sample codes
B : Bearing stopper groove
C : Small-end diameter grade
D : Standard stamp
E : Weight grade
F : Cylinder No.
G : Management code
I : Management code

- Be sure that front mark (H) on connecting rod bearing cap is facing front of the engine.

14. Tighten connecting rod bolt as follows:

a. Inspect the outer diameter of connecting rod bolt. Refer to EM-117, "Inspection".

b. Apply engine oil to the threads and seats of connecting rod bolts.

c. Tighten connecting rod bolts.

: 19.6 N·m (2.0 kg-m, 14 ft-lb)

d. Then tighten all connecting rod bolts 90 degrees clockwise (angle tightening).

CAUTION:

Always use the angle wrench [SST: KV10112100 (BT8653-A)]. Avoid tightening based on visual check alone.

- After tightening connecting rod bolts, check that crankshaft rotates smoothly.
- Check the connecting rod side clearance. Refer to EM-117, "Inspection".

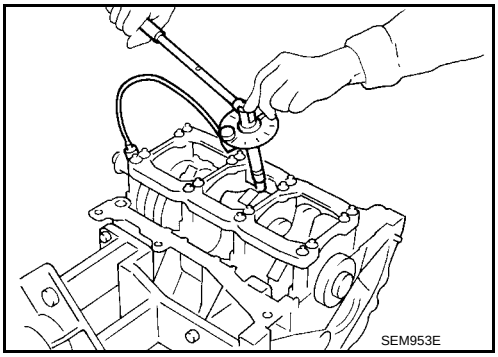

15. Install baffle plate to main bearing beam.

16. Install new rear oil seal retainer to cylinder block. Refer to EM-47, "REAR OIL SEAL : Removal and Installation".

17. Install pilot converter.
    - With drift [outer diameter: approximately 33 mm (1.30 in)], press-fit as far as it will go.

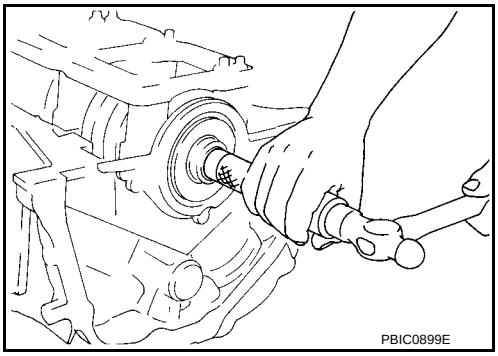

cardiagn.com

- Press-fit pilot converter with its chamfer facing crankshaft as shown in the figure.

  ⇦ : Crankshaft side

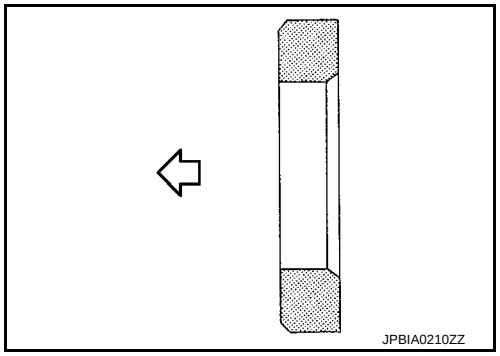

18. Install knock sensors.
    - Install knock sensor so that connector faces the rear of the engine.

      A : Bank 1
      B : Bank 2
      ⇦ : Engine front

    - After installing knock sensor, connect harness connector, and lay it out to rear of engine.

    CAUTION:
    - **Never tighten mounting bolts while holding connector.**
    - **If any impact by dropping is applied to knock sensor, replace it with new one.**

    NOTE:
    - Check that there is no foreign material on the cylinder block mating surface and the back surface of knock sensor.
    - Check that knock sensor does not interfere with other parts.

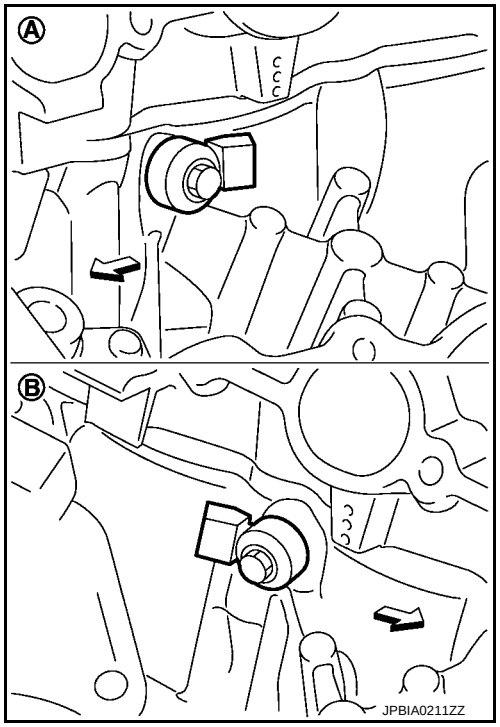

19. Note the following, assemble in the reverse order of disassembly after this step.

Drive plate
- When installing drive plate to crankshaft, be sure to correctly align crankshaft side dowel pin and drive plate side dowel pin hole.
- If these are not aligned correctly, engine runs roughly and “MIL” turns on.
- Install drive plate (2) and reinforcement plate (3) as shown in the figure.

  1 : Ring gear
  4 : Pilot converter
  5 : Crankshaft
  A : Rounded
  ⇦ : Engine front

- Holding ring gear with the pulley holder (commercial service tool).
- Tighten mounting bolts crosswise over several times.

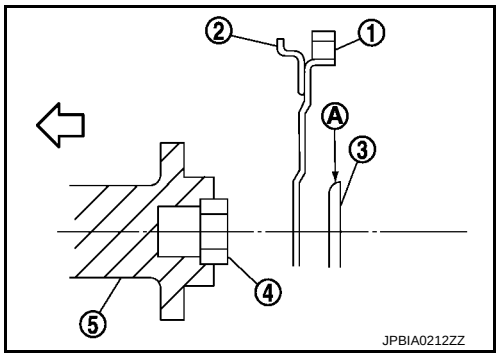

Inspection

INFOID:0000000012409903

CRANKSHAFT END PLAY

cardiagn.com

- Measure the clearance between thrust bearings and crankshaft arm when crankshaft is moved fully forward or backward with a dial indicator.

Standard and limit : Refer to EM-138, "Cylinder Block".

- If the measured value exceeds the limit, replace thrust bearings, and measure again. If it still exceeds the limit, replace crankshaft also.

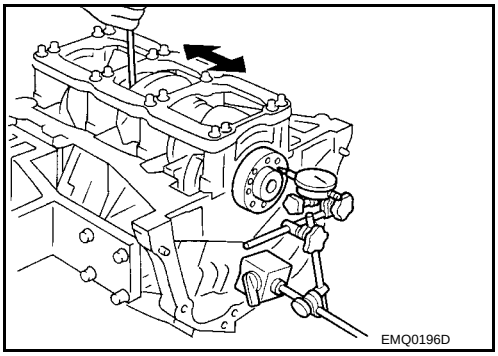

CONNECTING ROD SIDE CLEARANCE

- Measure the side clearance between connecting rod and crankshaft arm with a feeler gauge (A).

Standard and limit : Refer to EM-138, "Cylinder Block".

- If the measured value exceeds the limit, replace connecting rod, and measure again. If it still exceeds the limit, replace crankshaft also.

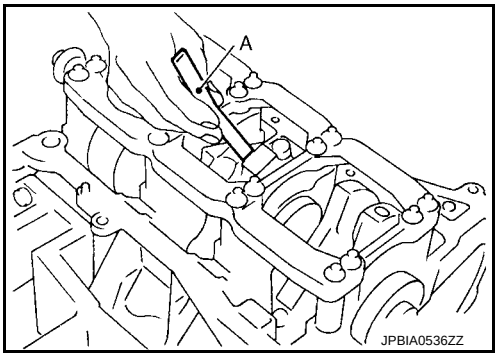

PISTON TO PISTON PIN OIL CLEARANCE

Piston Pin Hole Diameter

Measure the inner diameter of piston pin hole with an inside micrometer (A).

Standard : Refer to EM-138, "Cylinder Block".

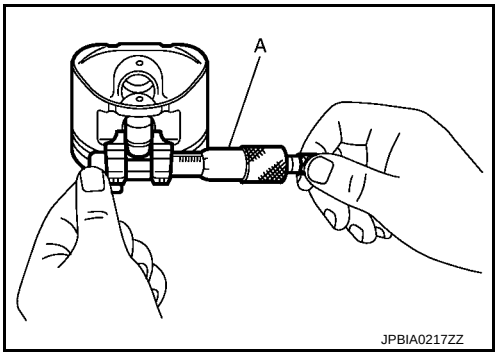

Piston Pin Outer Diameter

Measure the outer diameter of piston pin with a micrometer (A).

Standard : Refer to EM-138, "Cylinder Block".

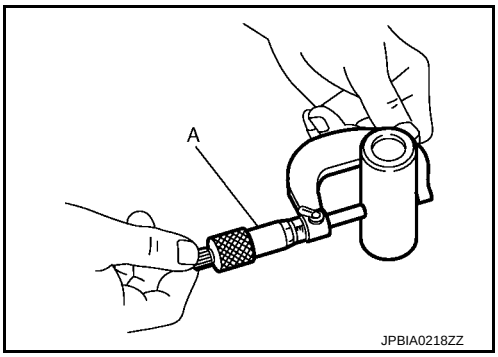

Piston to Piston Pin Oil Clearance

(Piston to piston pin oil clearance) = (Piston pin hole diameter) – (Piston pin outer diameter)

Standard : Refer to EM-138, "Cylinder Block".

- If the calculated value is out of the standard, replace piston and piston pin assembly.
- When replacing piston and piston pin assembly, refer to EM-127, "Description".

NOTE:

- Piston is available together with piston pin as assembly.

cardiagn.com

- Piston pin (piston pin hole) grade is provided only for the parts installed at the plant. For service parts, no piston pin grades can be selected. (Only “0” grade is available.)

PISTON RING SIDE CLEARANCE

- Measure the side clearance of piston ring (1) and piston ring groove with a feeler gauge (C).

A : NG
B : OK

Standard and limit : Refer to EM-138, "Cylinder Block".

- If the measured value exceeds the limit, replace piston ring, and measure again. If it still exceeds the limit, replace piston also.

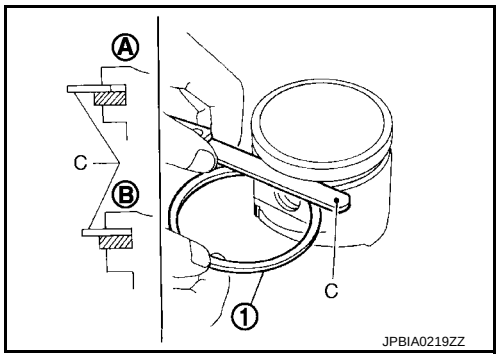

PISTON RING END GAP

- Check that the cylinder bore inner diameter is within the specification. Refer to EM-138, "Cylinder Block".
- Lubricate with new engine oil to piston (1) and piston ring (2), and then insert piston ring until middle of cylinder with piston, and measure the piston ring end gap with a feeler gauge (B).

A : Press-fit
C : Measuring point

Standard and limit : Refer to EM-138, "Cylinder Block".

- If the measured value exceeds the limit, replace piston ring, and measure again. If it still exceeds the limit, rebore cylinder and use oversize piston and piston rings.

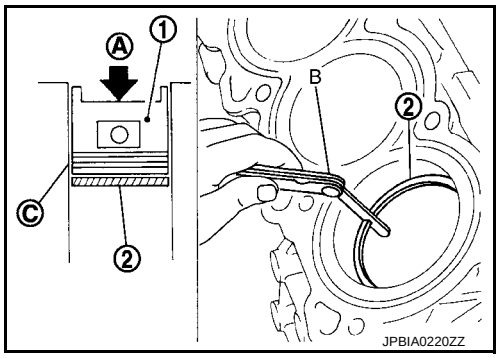

CONNECTING ROD BEND AND TORSION

- Check with a connecting rod aligner.

A : Bend
B : Torsion
C : Feeler gauge

Bend limit
Torsion limit **: Refer to EM-138, "Cylinder Block".**

- If it exceeds the limit, replace connecting rod assembly.

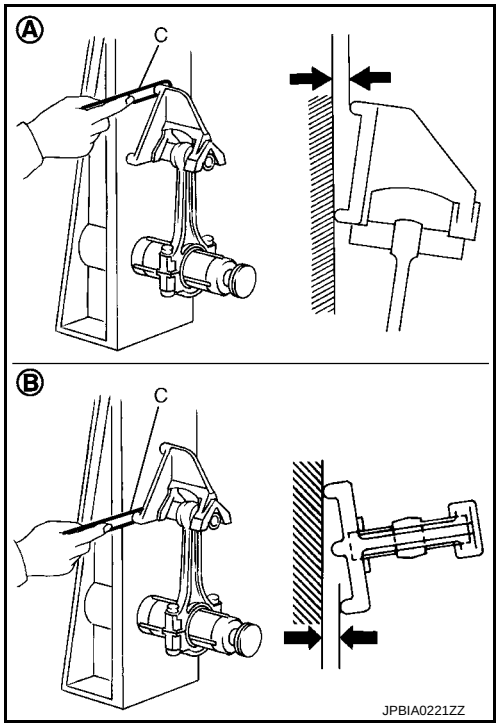

CONNECTING ROD BIG END DIAMETER

- Install connecting rod bearing cap without installing connecting rod bearing, and tightening connecting rod bolts to the specified torque. Refer to EM-109, "Disassembly and Assembly" for the tightening procedure.

cardiagn.com

- Measure the inner diameter of connecting rod big end with an inside micrometer.

1 : Connecting rod

Standard : Refer to EM-138, "Cylinder Block".

- If out of the standard, replace connecting rod assembly.

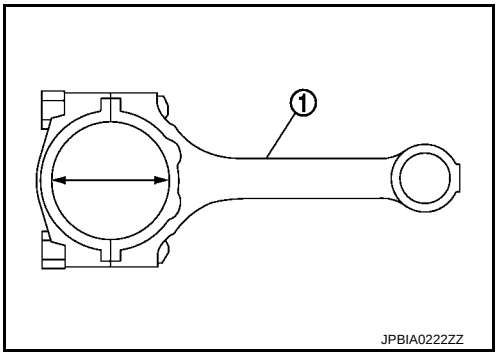

CONNECTING ROD BUSHING OIL CLEARANCE

Connecting Rod Bushing Inner Diameter

Measure the inner diameter of connecting rod bushing with an inside micrometer (A).

Standard : Refer to EM-138, "Cylinder Block".

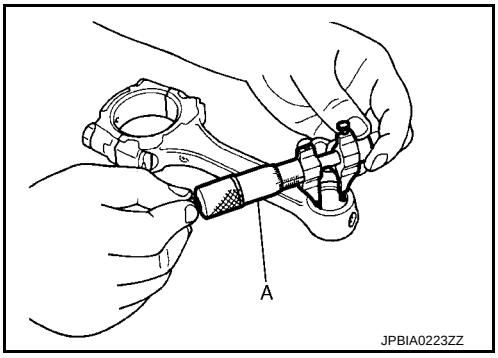

Piston Pin Outer Diameter

Measure the outer diameter of piston pin with a micrometer (A).

Standard : Refer to EM-138, "Cylinder Block".

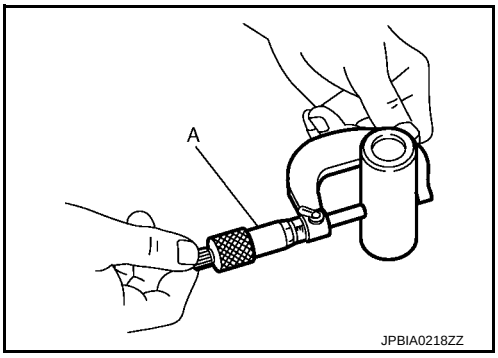

Connecting Rod Bushing Oil Clearance

(Connecting rod bushing oil clearance) = (Connecting rod bushing inner diameter) – (Piston pin outer diameter)

Standard and limit : Refer to EM-138, "Cylinder Block".

- If the calculated value exceeds the limit, replace connecting rod assembly and/or piston and piston pin assembly.
- If replacing piston and piston pin assembly, refer to EM-127, "Description".
- If replacing connecting rod assembly, refer to EM-128, "Connecting Rod Bearing" to select the connecting rod bearing.

A : Sample codes
B : Bearing stopper groove
C : Small-end diameter grade
D : Standard stamp
E : Weight grade
F : Cylinder No.
G : Management code

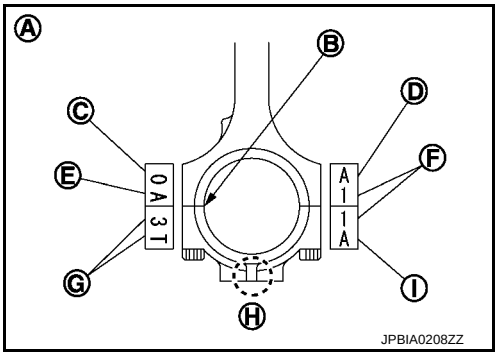

cardiagn.com

H : Front mark
I : Management code

Factory installed parts grading:
- Service parts apply only to grade “0”.

A : Piston grade number
B : Front mark
C : Piston pin grade number
D : Identification code

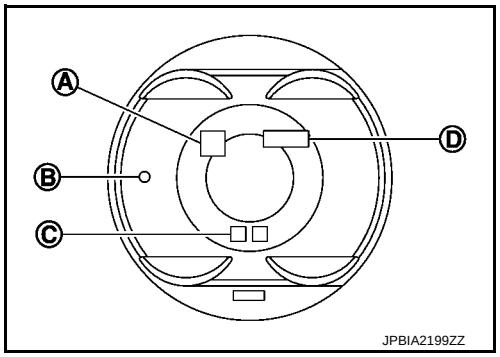

Unit: mm (in)

Grade	0	1
Connecting rod bushing inner diameter *	22.000 - 22.006 (0.8661 - 0.8664)	22.006 - 22.012 (0.8664 - 0.8666)
Piston pin hole diameter	21.993 - 21.999 (0.8659 - 0.8661)	21.999 - 22. 005 (0.8661 - 0.8663)
Piston pin outer diameter	21.989 - 21.995 (0.8657 - 0.8659)	21.995 - 22.001 (0.8659 - 0.8662)

*: After installing in connecting rod

CYLINDER BLOCK DISTORTION

- Using a scraper, remove gasket on the cylinder block surface, and also remove engine oil, scale, carbon, or other contamination.
  CAUTION:
  Be careful not to allow gasket flakes to enter engine oil or engine coolant passages.
- Measure the distortion on the cylinder block upper face at some different points in six directions (C), (D), (E), (F), (G), and (H) with a straightedge (A) and a feeler gauge (B).

  Limit : Refer to EM-138, "Cylinder Block".
- If it exceeds the limit, replace cylinder block.

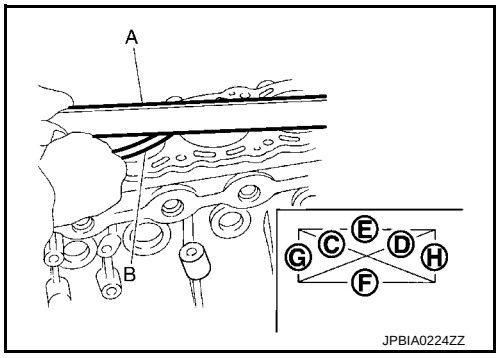

MAIN BEARING HOUSING INNER DIAMETER

- Install main bearing caps and main bearing beam without installing main bearings, and tighten main bearing cap bolts to the specified torque. Refer to EM-109, "Disassembly and Assembly" for the tightening procedure.
- Measure the inner diameter of main bearing housing with a bore gauge.

  Standard : Refer to EM-138, "Cylinder Block".
- If out of the standard, replace cylinder block (1) and main bearing caps (2) as assembly.
  NOTE:
  Cylinder block cannot be replaced as a single part, because it is machined together with main bearing caps.

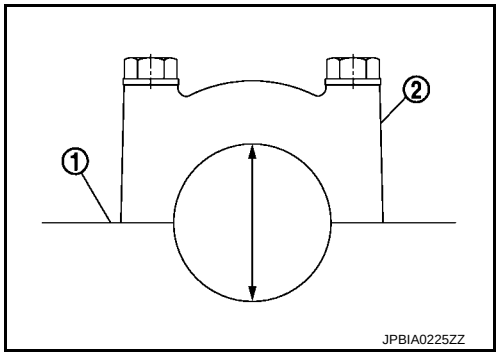

cardiagn.com

PISTON TO CYLINDER BORE CLEARANCE

Cylinder Bore inner Diameter

- Using a bore gauge, measure cylinder bore for wear, out-of-round and taper at six different points on each cylinder. [(A) and (B) directions at (C), (D) and (E)] is in longitudinal direction of engine.

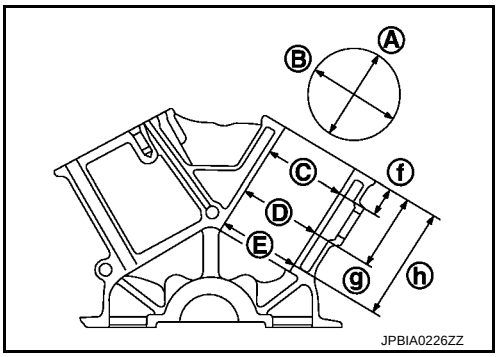

f : 10 mm (0.39 in)
g : 60 mm (2.36 in)
h : 120 mm (4.72 in)

Standard and limit : Refer to EM-138, "Cylinder Block".

- If the measured value exceeds the limit, or if there are scratches and/or seizure on the cylinder inner wall, hone or rebore the inner wall.
- Oversize piston is provided. When using oversize piston, rebore cylinder so that the clearance of the piston to cylinder bore satisfies the standard.

CAUTION:
When using oversize piston, use oversize pistons for all cylinders with oversize piston rings.

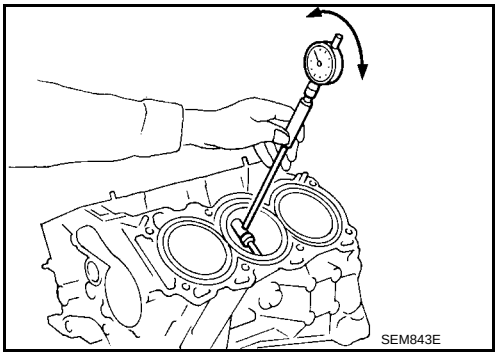

Oversize (O/S) : 0.2 mm (0.008 in)

Piston Skirt Diameter

Measure the outer diameter of piston skirt with a micrometer (A).

Measure point Standard : Refer to EM-138, "Cylinder Block".

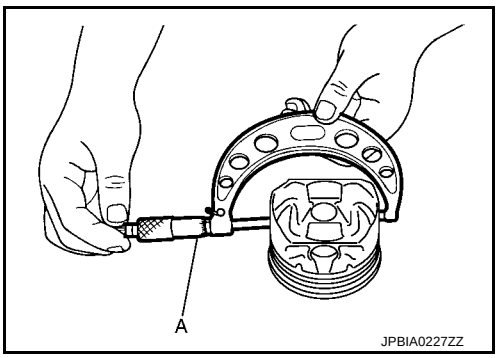

Piston-to-Cylinder Bore Clearance

Calculate by piston skirt diameter and cylinder bore inner diameter [direction (B), position (D)].

A : Direction A
C : Position C
E : Position E
f : 10 mm (0.39 in)
g : 60 mm (2.36 in)
h : 120 mm (4.72 in)

(Clearance) = (Cylinder bore inner diameter) – (Piston skirt diameter).

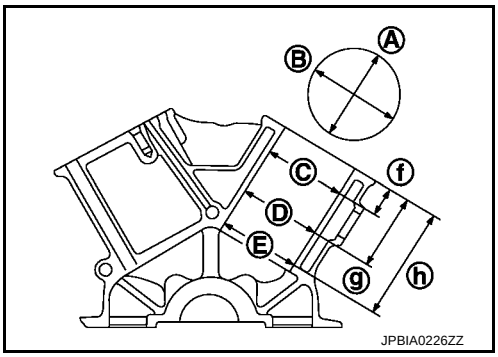

Standard and limit : Refer to EM-138, "Cylinder Block".

- If the calculated value exceeds the limit, replace piston and piston pin assembly. Refer to EM-127, "Piston".

Reboring Cylinder Bore

1. Cylinder bore size is determined by adding piston to cylinder bore clearance to piston skirt diameter.

cardiagn.com

Rebored size calculation: D = A + B – C

where,

A: Piston skirt diameter as measured

B: Piston to cylinder bore clearance (standard value)

C: Honing allowance 0.02 mm (0.0008 in)

D: Bored diameter

2. Install main bearing caps and main bearing beam, and tighten to the specified torque. Otherwise, cylinder bores may be distorted in final assembly.
3. Cut cylinder bores.
   NOTE:
   - When any cylinder needs boring, all other cylinders must also be bored.
   - Do not cut too much out of cylinder bore at a time. Cut only 0.05 mm (0.0020 in) or so in diameter at a time.
4. Hone cylinders to obtain the specified piston to cylinder bore clearance.
5. Measure finished cylinder bore for the out-of-round and taper.
   NOTE:
   Measurement should be done after cylinder bore cools down.

CRANKSHAFT MAIN JOURNAL DIAMETER

- Measure the outer diameter of crankshaft main journals with a micrometer.

Standard : Refer to EM-138, "Cylinder Block".

- If out of the standard, measure the main bearing oil clearance. Then use undersize bearing. Refer to EM-129, "Main Bearing".

CRANKSHAFT PIN JOURNAL DIAMETER

- Measure the outer diameter of crankshaft pin journal with a micrometer (A).

Standard : Refer to EM-138, "Cylinder Block".

- If out of the standard, measure the connecting rod bearing oil clearance. Then use undersize bearing. Refer to EM-128, "Connecting Rod Bearing".

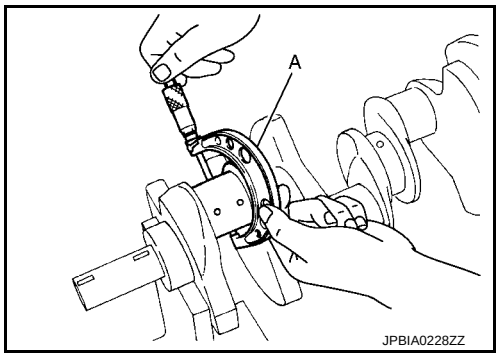

CRANKSHAFT OUT-OF-ROUND AND TAPER

- Measure the dimensions at four different points as shown in the figure on each main journal and pin journal with a micrometer.
- Out-of-round is indicated by the difference in the dimensions between (d) and (c) at (a) and (b).
- Taper is indicated by the difference in the dimensions between.

Limit : Refer to EM-138, "Cylinder Block".

- If the measured value exceeds the limit, correct or replace crankshaft.
- If corrected, measure the bearing oil clearance of the corrected main journal and/or pin journal. Then select the main bearing and/or connecting rod bearing. Refer to EM-129, "Main Bearing" and/or EM-128, "Connecting Rod Bearing".

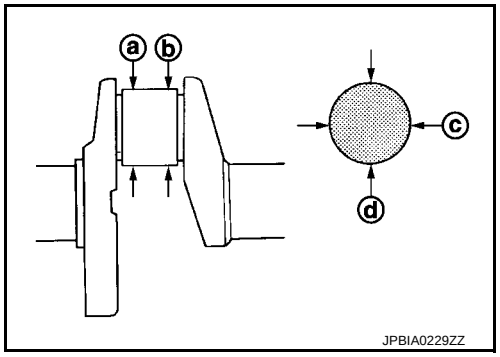

CRANKSHAFT RUNOUT

- Place V-block on precise flat table, and support the journals on the both end of crankshaft.

cardiagn.com

- Place a dial indicator straight up on the No. 3 journal.
- While rotating crankshaft, read the movement of the pointer on a dial indicator. (Total indicator reading)

Standard and limit : Refer to EM-138, "Cylinder Block".

- If it exceeds the limit, replace crankshaft.

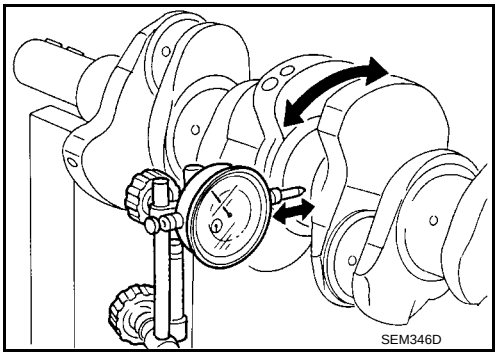

CONNECTING ROD BEARING OIL CLEARANCE

Method by Calculation

- Install connecting rod bearings (1) to connecting rod (2) and connecting rod cap, and tighten connecting rod bolts to the specified torque. Refer to EM-109, "Disassembly and Assembly" for the tightening procedure.
- Measure the inner diameter of connecting rod bearing with an inside micrometer.

(Oil clearance) = (Connecting rod bearing inner diameter) – (Crankshaft pin journal diameter)

Standard and limit : Refer to EM-142, "Connecting Rod Bearing".

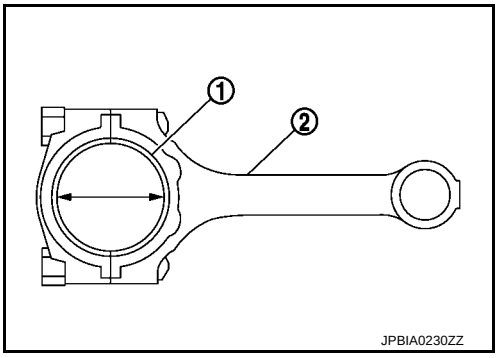

- If the calculated value exceeds the limit, select proper connecting rod bearing according to connecting rod big end diameter and crankshaft pin journal diameter to obtain the specified bearing oil clearance. Refer to EM-128, "Connecting Rod Bearing".

Method of Using Plastigage

- Remove oil and dust on crankshaft pin journal and the surfaces of each bearing completely.
- Cut a plastigage slightly shorter than the bearing width, and place it in crankshaft axial direction, avoiding oil holes.
- Install connecting rod bearings to connecting rod and connecting rod bearing cap, and tighten connecting rod bolts to the specified torque. Refer to EM-109, "Disassembly and Assembly" for the tightening procedure.

CAUTION:
Never rotate crankshaft.

- Remove connecting rod bearing cap and bearings, and using the scale on the plastigage bag, measure the plastigage width.

NOTE:
The procedure when the measured value exceeds the limit is same as that described in the “Method by Calculation”.

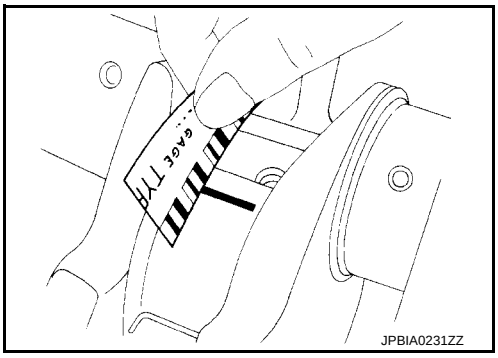

MAIN BEARING OIL CLEARANCE

Method by Calculation

cardiagn.com

- Install main bearings (3) to cylinder block (1) and main bearing caps (2), and main bearing cap bolts with main bearing beam to the specified torque. Refer to EM-109, "Disassembly and Assembly" for the tightening procedure.
- Measure the inner diameter of main bearing with a bore gauge.

(Oil clearance) = (Main bearing inner diameter) – (Crankshaft main journal diameter)

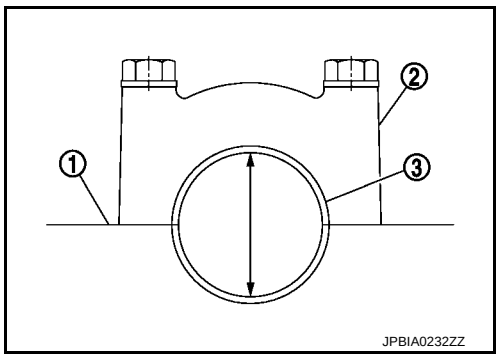

Standard and limit : Refer to EM-141, "Main Bearing".

- If the calculated value exceeds the limit, select proper main bearing according to main bearing inner diameter and crankshaft main journal diameter to obtain the specified bearing oil clearance. Refer to EM-129, "Main Bearing".

Method of Using Plastigage

- Remove engine oil and dust on crankshaft journal and the surfaces of each bearing completely.
- Cut a plastigage slightly shorter than the bearing width, and place it in crankshaft axial direction, avoiding oil holes.
- Install main bearing to cylinder block and main bearing caps, and tighten main bearing cap bolts with main bearing beam to the specified torque. Refer to EM-109, "Disassembly and Assembly" for the tightening procedure.

  CAUTION:
  Never rotate crankshaft.
- Remove main bearing caps and bearings, and using the scale on the plastigage bag, measure the plastigage width.

  NOTE:
  The procedure when the measured value exceeds the limit is same as that described in the “Method by Calculation”.

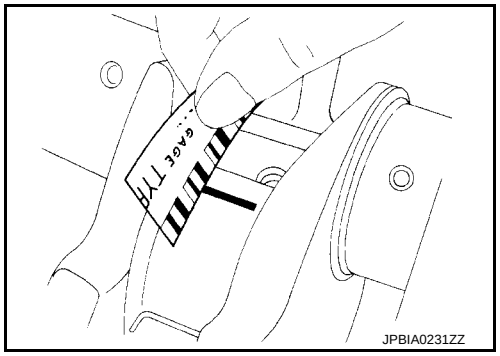

MAIN BEARING CRUSH HEIGHT

- When main bearing cap is removed after being tightened to the specified torque with main bearings (1) installed, the tip end of bearing must protrude. Refer to EM-109, "Disassembly and Assembly" for the tightening procedure.

A : Crush height

Standard : There must be crush height.

- If the standard is not met, replace main bearings.

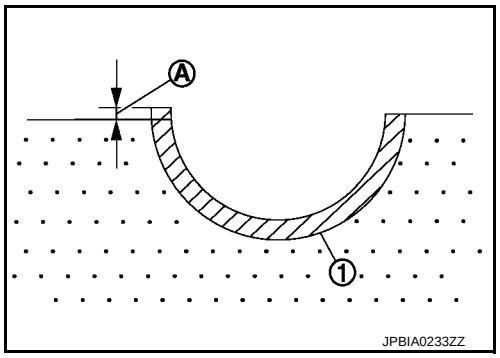

CONNECTING ROD BEARING CRUSH HEIGHT

- When connecting rod bearing cap is removed after being tightened to the specified torque with connecting rod bearings (1) installed, the tip end of bearing must protrude. Refer to EM-109, "Disassembly and Assembly" for the tightening procedure.

A : Crush height

Standard : There must be crush height.

- If the standard is not met, replace connecting rod bearings.

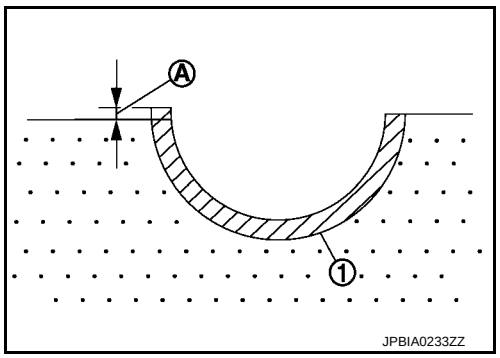

cardiagn.com

MAIN BEARING CAP BOLT OUTER DIAMETER

- Measure the outer diameters (c), (d) at two positions as shown in the figure.

  a : 20 mm (0.79 in)
  b : 30 mm (1.18 in)
  e : 10 mm (0.39 in)

- If reduction appears in (a) range, regard it (c).

  Limit [(d) – (c)] : 0.11 mm (0.0043 in)

- If it exceeds the limit (large difference in dimensions), replace main bearing cap bolt with new one.

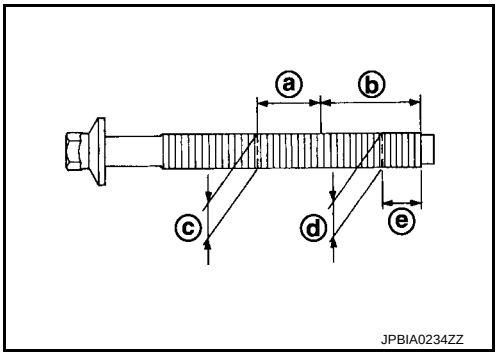

CONNECTING ROD BOLT OUTER DIAMETER

- Measure the outer diameter (d) at position shown in the figure.
- If the reduction appears in a position other than (d), regard it as (d).

  Standard : 7.90 - 8.00 mm (0.3110 - 0.3150 in)
  Limit : 7.75 mm (0.3051 in)

- When (d) exceeds the limit (when it becomes thinner), replace connecting rod bolt with new one.

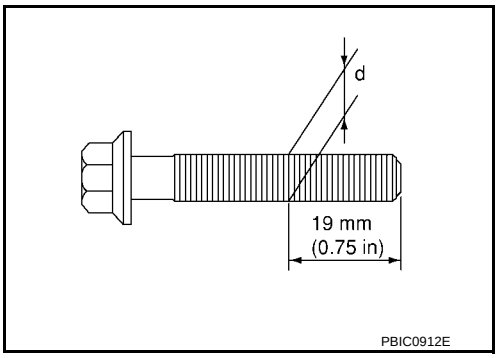

DRIVE PLATE

- Check drive plate and signal plate (A) for deformation or damage.

  ⇦ :Engine front

  CAUTION:
  - **Never disassemble drive plate.**
  - **Never place drive plate with signal plate facing down.**
  - **When handling signal plate, take care not to damage or scratch it.**
  - **Handle signal plate in a manner that prevents it from becoming magnetized.**

- If anything is found, replace drive plate.

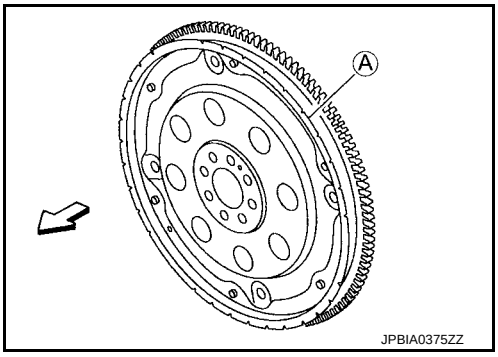

OIL JET

- Check nozzle for deformation and damage.
- Blow compressed air from nozzle, and check for clogs.
- If it is not satisfied, clean or replace oil jet.

OIL JET RELIEF VALVE

- Using a clean plastic stick, press check valve in oil jet relief valve. Check that valve moves smoothly with proper reaction force.
- If it is not satisfied, replace oil jet relief valve.

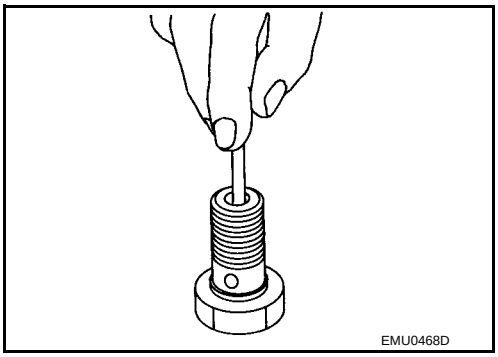

cardiagn.com

HOW TO SELECT PISTON AND BEARING

Description

INFOID:0000000012409904

Selection points	Selection parts	Selection items	Selection methods
Between cylinder block and crankshaft	Main bearing	Main bearing grade (bearing thickness)	Determined by match of cylinder block bearing housing grade (inner diameter of housing) and crankshaft journal grade (outer diameter of journal)
Between crankshaft and connecting rod	Connecting rod bearing	Connecting rod bearing grade (bearing thickness)	Combining service grades for connecting rod big end diameter and crankshaft pin outer diameter determine connecting rod bearing selection.
Between cylinder block and piston	Piston and piston pin assembly (Piston is available together with piston pin as assembly.)	Piston grade (piston skirt diameter)	Piston grade = cylinder bore grade (inner diameter of bore)
Between piston and connecting rod*	—	—	—

*: For the service parts, the grade for fitting cannot be selected between piston pin and connecting rod. (Only “0” grade is available.) The information at the shipment from the plant is described as a reference.

- The identification grade stamped on each part is the grade for the dimension measured in new condition. This grade cannot apply to reused parts.
- For reused or repaired parts, measure the dimension accurately. Determine the grade by comparing the measurement with the values of each selection table.
- For details of the measurement method of each part, the reuse standards and the selection method of the selective fitting parts, refer to the text.

Piston

INFOID:0000000012409905

WHEN NEW CYLINDER BLOCK IS USED

Check the cylinder bore grade (“1”, “2” or “3”) on rear side of cylinder block, and select piston of the same grade.

NOTE:

Piston is available with piston pin as a set for the service part. (Only “0” grade piston pin is available.)

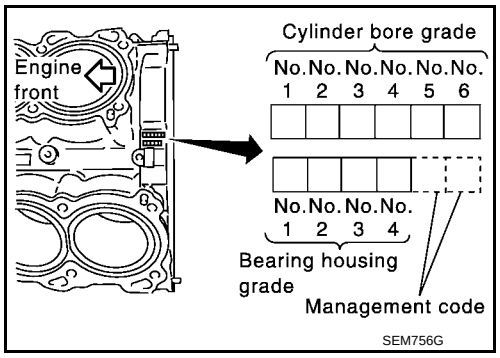

WHEN NEW CYLINDER BLOCK IS REUSED

1. Measure the cylinder bore inner diameter. Refer to EM-117, "Inspection".
2. Determine the bore grade by comparing the measurement with the values under the cylinder bore inner diameter of the “PISTON SELECTION TABLE”.

cardiagn.com

3. Select piston of the same grade.

A : Piston grade number
B : Front mark
C : Piston pin grade number
D : Identification code

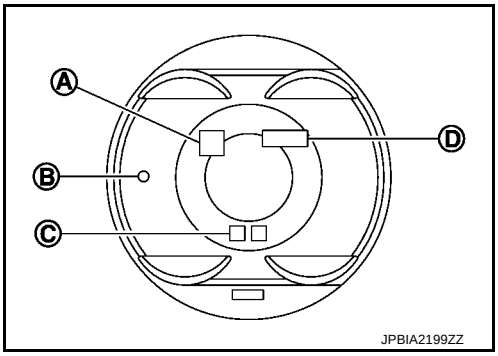

PISTON SELECTION TABLE

Unit: mm (in)

Grade	1	2	3
Cylinder bore inner diameter	95.500 - 95.510 (3.7598 - 3.7602)	95.510 - 95.520 (3.7602 - 3.7606)	95.520 - 95.530 (3.7606 - 3.7610)
Piston skirt diameter	95.480 - 95.490 (3.7590 - 3.7594)	95.490 - 95.500 (3.7594 - 3.7598)	95.500 - 95.510 (3.7598 - 3.7602)

NOTE:
- Piston is available together with piston pin as assembly.
- Piston pin (piston pin hole) grade is provided only for the parts installed at the plant. For service parts, no piston pin grades can be selected. (Only “0” grade is available.)
- No second grade mark is available on piston.

Connecting Rod Bearing

INFOID:0000000012409906

WHEN NEW CONNECTING ROD AND CRANKSHAFT ARE USED

- Check pin diameter grade (“0”, “1” or “2”) on front of crankshaft, and select connecting rod bearing of the same grade.

A : Journal diameter grade No. 1
B : Journal diameter grade No. 2
C : Journal diameter grade No. 3
D : Journal diameter grade No. 4
E : Pin diameter grade No. 1
F : Pin diameter grade No. 2
G : Pin diameter grade No. 3
H : Pin diameter grade No. 4
I : Pin diameter grade No. 5
J : Pin diameter grade No. 6
K : Identification

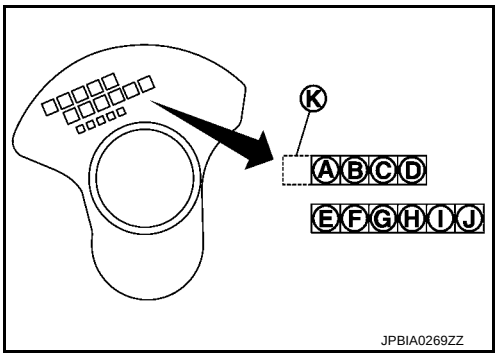

NOTE:
There is no grading for connecting rod big end diameter.

WHEN CONNECTING ROD AND CRANKSHAFT ARE REUSED

1. Measure the connecting rod big end diameter. Refer to EM-117, "Inspection".
2. Check that the connecting rod big end diameter is within the standard value.
3. Measure the crankshaft pin journal diameter. Refer to EM-117, "Inspection".
4. Determine the grade of crankshaft pin diameter grade by corresponding to the measured dimension in “Crankshaft pin journal diameter” column of “CONNECTING ROD BEARING SELECTION TABLE”.
5. Select connecting rod bearing of the same grade.

CONNECTING ROD BEARING SELECTION TABLE

Unit: mm (in)

Connecting rod big end diameter	55.000 - 55.013 (2.1654 - 2.1659)

cardiagn.com

Unit: mm (in)

Crankshaft		Connecting rod bearing		
Crankshaft pin journal diameter	Grade (Mark)	Dimension (Bearing thickness range)	Bearing grade No.	Color
51.968 - 51.974 (2.0460 - 2.0462)	0	1.500 - 1.503 (0.0591 - 0.0592)	STD 0	Black
51.962 - 51.968 (2.0457 - 2.0460)	1	1.503 - 1.506 (0.0592 - 0.0593)	STD 1	Brown
51.956 - 51.962 (2.0455 - 2.0457)	2	1.506 - 1.509 (0.0593 - 0.0594)	STD 2	Green

CONNECTING ROD BEARING GRADE TABLE

Connecting rod bearing grade table : **Refer to EM-142, "Connecting Rod Bearing".**

UNDERSIZE BEARING USAGE GUIDE

- When the specified connecting rod bearing oil clearance is not obtained with standard size connecting rod bearings, use undersize (US) bearings.
- When using undersize (US) bearing, measure the connecting rod bearing inner diameter with bearing installed, and grind crankshaft pin so that the connecting rod bearing oil clearance satisfies the standard.

CAUTION:
In grinding crankshaft pin to use undersize bearings, keep the fillet R (A) [1.5 - 1.7 mm (0.059 - 0.067 in)].

Bearing undersize table : **Refer to EM-142, "Connecting Rod Bearing".**

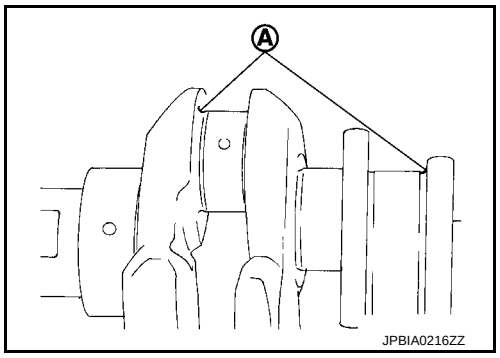

Main Bearing

INFOID:0000000012409907

WHEN NEW CYLINDER BLOCK AND CRANKSHAFT ARE USED

1. "MAIN BEARING SELECTION TABLE" rows correspond to bearing housing grade on rear left side of cylinder block.

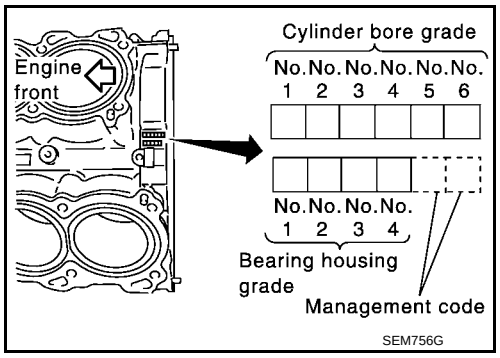

2. "MAIN BEARING SELECTION TABLE" columns correspond to journal diameter grade on front side of crankshaft.

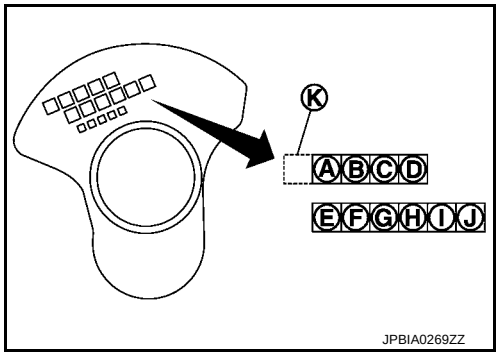

A : Journal diameter grade No. 1
B : Journal diameter grade No. 2
C : Journal diameter grade No. 3
D : Journal diameter grade No. 4
E : Pin diameter grade No. 1
F : Pin diameter grade No. 2
G : Pin diameter grade No. 3
H : Pin diameter grade No. 4
I : Pin diameter grade No. 5

cardiagn.com

J : Pin diameter grade No. 6

K : Identification code

3. Select main bearing grade at the point where selected row and column meet in “MAIN BEARING SELECTION TABLE”.
4. Apply sign at crossing in above step 3 to “MAIN BEARING GRADE TABLE”.
   NOTE:
   - “MAIN BEARING GRADE TABLE” applies to all journals.
   - Service parts is available as a set of both upper and lower.

WHEN CYLINDER BLOCK AND CRANKSHAFT ARE REUSED

1. Measure cylinder block main bearing housing inner diameter and crankshaft main journal diameter. Refer to EM-117, "Inspection".
2. Correspond the measured dimension in “Cylinder block main bearing housing inner diameter” row of “MAIN BEARING SELECTION TABLE”.
3. Correspond the measured dimension in “Crankshaft main journal diameter” column of “MAIN BEARING SELECTION TABLE”.
4. Follow step 3 and later in “When New Cylinder Block and Crankshaft are Used”.

MAIN BEARING SELECTION TABLE

Cylinder block main bearing housing inner diameter Unit: mm (in) / Crankshaft main journal diameter Unit: mm (in)		Mark	A	B	C	D	E	F	G	H	J	K	L	M	N	P	R	S	T	U	V	W	X	Y	4	7
		Hole diameter	63.993 - 63.994 (2.5194 - 2.5194)	63.994 - 63.995 (2.5194 - 2.5195)	63.995 - 63.996 (2.5195 - 2.5195)	63.996 - 63.997 (2.5195 - 2.5196)	63.997 - 63.998 (2.5196 - 2.5196)	63.998 - 63.999 (2.5196 - 2.5196)	63.999 - 64.000 (2.5196 - 2.5197)	64.000 - 64.001 (2.5197 - 2.5197)	64.001 - 64.002 (2.5197 - 2.5198)	64.002 - 64.003 (2.5198 - 2.5198)	64.003 - 64.004 (2.5198 - 2.5198)	64.004 - 64.005 (2.5198 - 2.5199)	64.005 - 64.006 (2.5199 - 2.5199)	64.006 - 64.007 (2.5199 - 2.5200)	64.007 - 64.008 (2.5200 - 2.5200)	64.008 - 64.009 (2.5200 - 2.5200)	64.009 - 64.010 (2.5200 - 2.5201)	64.010 - 64.011 (2.5201 - 2.5201)	64.011 - 64.012 (2.5201 - 2.5202)	64.012 - 64.013 (2.5202 - 2.5202)	64.013 - 64.014 (2.5202 - 2.5202)	64.014 - 64.015 (2.5202 - 2.5203)	64.015 - 64.016 (2.5203 - 2.5203)	64.016 - 64.017 (2.5203 - 2.5203)
Mark	Axle diameter																									
A	59.975 - 59.974 (2.3612 - 2.3612)		0	0	0	01	01	01	1	1	1	12	12	12	2	2	2	23	23	23	3	3	3	34	34	34
B	59.974 - 59.973 (2.3612 - 2.3611)		0	0	01	01	01	1	1	1	12	12	12	2	2	2	23	23	23	3	3	3	34	34	34	4
C	59.973 - 59.972 (2.3611 - 2.3611)		0	01	01	01	1	1	1	12	12	12	2	2	2	23	23	23	3	3	3	34	34	34	4	4
D	59.972 - 59.971 (2.3611 - 2.3611)		01	01	01	1	1	1	12	12	12	2	2	2	23	23	23	3	3	3	34	34	34	4	4	4
E	59.971 - 59.970 (2.3611 - 2.3610)		01	01	1	1	1	12	12	12	2	2	2	23	23	23	3	3	3	34	34	34	4	4	4	45
F	59.970 - 59.969 (2.3610 - 2.3610)		01	1	1	1	12	12	12	2	2	2	23	23	23	3	3	3	34	34	34	4	4	4	45	45
G	59.969 - 59.968 (2.3610 - 2.3609)		1	1	1	12	12	12	2	2	2	23	23	23	3	3	3	34	34	34	4	4	4	45	45	45
H	59.968 - 59.967 (2.3609 - 2.3609)		1	1	12	12	12	2	2	2	23	23	23	3	3	3	34	34	34	4	4	4	45	45	45	5
J	59.967 - 59.966 (2.3609 - 2.3609)		1	12	12	12	2	2	2	23	23	23	3	3	3	34	34	34	4	4	4	45	45	45	5	5
K	59.966 - 59.965 (2.3609 - 2.3608)		12	12	12	2	2	2	23	23	23	3	3	3	34	34	34	4	4	4	45	45	45	5	5	5
L	59.965 - 59.964 (2.3608 - 2.3608)		12	12	2	2	2	23	23	23	3	3	3	34	34	34	4	4	4	45	45	45	5	5	5	56
M	59.964 - 59.963 (2.3608 - 2.3607)		12	2	2	2	23	23	23	3	3	3	34	34	34	4	4	4	45	45	45	5	5	5	56	56
N	59.963 - 59.962 (2.3607 - 2.3607)		2	2	2	23	23	23	3	3	3	34	34	34	4	4	4	45	45	45	5	5	5	56	56	56
P	59.962 - 59.961 (2.3607 - 2.3607)		2	2	23	23	23	3	3	3	34	34	34	4	4	4	45	45	45	5	5	5	56	56	56	6
R	59.961 - 59.960 (2.3607 - 2.3606)		2	23	23	23	3	3	3	34	34	34	4	4	4	45	45	45	5	5	5	56	56	56	6	6
S	59.960 - 59.959 (2.3606 - 2.3606)		23	23	23	3	3	3	34	34	34	4	4	4	45	45	45	5	5	5	56	56	56	6	6	6
T	59.959 - 59.958 (2.3606 - 2.3605)		23	23	3	3	3	34	34	34	4	4	4	45	45	45	5	5	5	56	56	56	6	6	6	67
U	59.958 - 59.957 (2.3605 - 2.3605)		23	3	3	3	34	34	34	4	4	4	45	45	45	5	5	5	56	56	56	6	6	6	67	67
V	59.957 - 59.956 (2.3605 - 2.3605)		3	3	3	34	34	34	4	4	4	45	45	45	5	5	5	56	56	56	6	6	6	67	67	67
W	59.956 - 59.955 (2.3605 - 2.3604)		3	3	34	34	34	4	4	4	45	45	45	5	5	5	56	56	56	6	6	6	67	67	67	7
X	59.955 - 59.954 (2.3604 - 2.3604)		3	34	34	34	4	4	4	45	45	45	5	5	5	56	56	56	6	6	6	67	67	67	7	7
Y	59.954 - 59.953 (2.3604 - 2.3603)		34	34	34	4	4	4	45	45	45	5	5	5	56	56	56	6	6	6	67	67	67	7	7	7
4	59.953 - 59.952 (2.3603 - 2.3603)		34	34	4	4	4	45	45	45	5	5	5	56	56	56	6	6	6	67	67	67	7	7	7	7
7	59.952 - 59.951 (2.3603 - 2.3603)		34	4	4	4	45	45	45	5	5	5	56	56	56	6	6	6	67	67	67	7	7	7	7	7

PBIC5332E

MAIN BEARING GRADE TABLE (ALL JOURNALS)

Main bearing grade table (All journals) : Refer to EM-141, "Main Bearing".

cardiagn.com

UNDERSIZE BEARING USAGE GUIDE

- When the specified main bearing oil clearance is not obtained with standard size main bearings, use underside (US) bearing.
- When using undersize (US) bearing, measure the main bearing inner diameter with bearing installed, and grind main journal so that the main bearing oil clearance satisfies the standard.

CAUTION:

In grinding crankshaft main journal to use undersize bearings, keep the fillet R (A) [1.5 - 1.7 mm (0.059 - 0.067 in)].

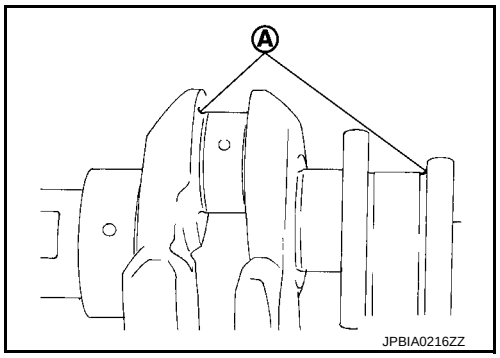

Bearing undersize table : Refer to EM-141, "Main Bearing".

cardiagn.com

SERVICE DATA AND SPECIFICATIONS (SDS)

SERVICE DATA AND SPECIFICATIONS (SDS)

General Specification

INFOID:0000000012409908

GENERAL SPECIFICATIONS

Cylinder arrangement		V-6
Displacement cm^3 (cu in)		3,498 (213.45)
Bore and stroke mm (in)		95.5 x 81.4 (3.760 x 3.205)
Valve arrangement		DOHC
Firing order		1-2-3-4-5-6
Number of piston rings	Compression	2
	Oil	1
Number of main bearings		4
Compression ratio		10.3
Compression pressure kPa (kg/cm^2, psi)/300 rpm	Standard	1,275 (13.0, 185)
	Minimum	981 (10.0, 142)
	Differential limit between cylinders	98 (1.0, 14)
Cylinder number	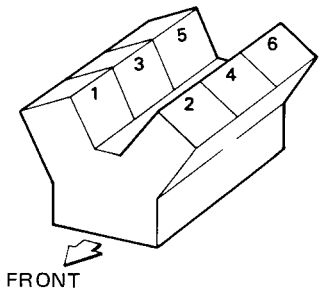 SEM713A	

cardiagn.com

Unit: degree

Valve timing
⇦ : Intake valve
⬅ : Exhaust valve

VTC Minimum phasing (Mechanical)

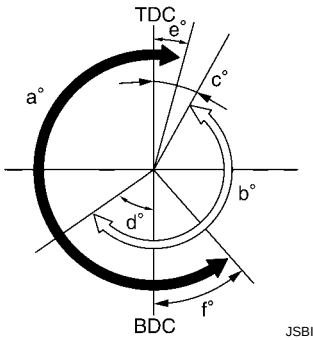

VTC Maximum phasing (Mechanical)

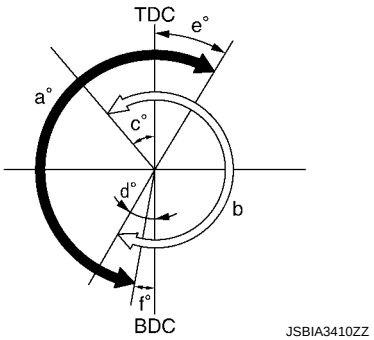

Engine start (Mechanical)

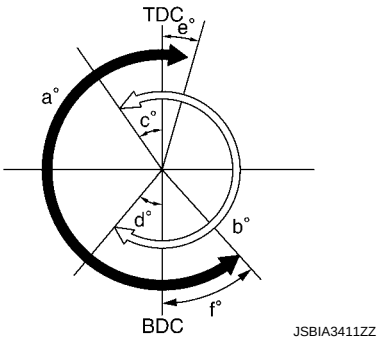

	a EXH valve opening angle	b INT valve opening angle	c INT open	d INT close	e EXH close	f EXH open
VTC Minimum phasing (Mechanical) *1	240	240	10 ATDC	70 ABDC	10 ATDC	50 BBDC
VTC Maximum phasing (Mechanical) *2			37 BTDC	23 ABDC	60 ATDC	0 BBDC
Intermediate lock phasing (Mechanical) *3			0 BTDC	60 ABDC	10 ATDC	50 BBDC

*1: When running at idle with engine coolant temperature more than 60°C (140°F).
*2: When the intake or exhaust valve opening angle is at the maximum.
*3: When starting the engine with engine coolant temperature 60°C (140°F) or less.

Drive Belt

INFOID:0000000012409909

DRIVE BELT

Tension of drive belt	Belt tension is not necessary, as it is automatically adjusted by drive belt auto-tensioner.

Spark Plug

INFOID:0000000012409910

SPARK PLUG

Unit: mm (in)

Make		DENSO
Standard type		FXE22HR11
Gap	Standard	1.1 (0.043)
	Limit	1.4 (0.055)

cardiagn.com

Intake Manifold

INFOID:0000000012409911

INTAKE MANIFOLD

Unit: mm (in)

Items		Limit
Surface distortion	Intake manifold	0.1 (0.004)

Exhaust Manifold

INFOID:0000000012409912

EXHAUST MANIFOLD

Unit: mm (in)

Items		Limit
Surface distortion	Exhaust manifold	0.3 (0.012)

Camshaft

INFOID:0000000012409913

CAMSHAFT

Unit: mm (in)

Items		Standard	Limit
Camshaft journal oil clearance	No. 1	0.045 - 0.086 (0.0018 - 0.0034)	0.15 (0.0059)
	No. 2, 3, 4	0.035 - 0.076 (0.0014 - 0.0030)	
Camshaft bracket inner diameter	No. 1	26.000 - 26.021 (1.0236 - 1.0244)	—
	No. 2, 3, 4	23.500 - 23.521 (0.9252 - 0.9260)	—
Camshaft journal diameter	No. 1	25.935 - 25.955 (1.0211 - 1.0218)	—
	No. 2, 3, 4	23.445 - 23.465 (0.9230 - 0.9238)	—
Camshaft end play		0.115 - 0.188 (0.0045 - 0.0074)	0.24 (0.0094)
Camshaft cam height “A”	Intake	45.665 - 45.855 (1.7978 - 1.8053)	0.2 (0.008)*1
	Exhaust	45.475 - 45.665 (1.7904 - 1.7978)	0.2 (0.008)*1
Camshaft runout [TIR*2]		Less than 0.02 mm (0.0008)	0.05 (0.0020)
Camshaft sprocket runout [TIR*2]		—	0.15 (0.0059)

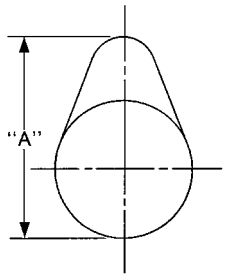

SEM671

*1: Cam wear limit

*2: Total indicator reading

VALVE LIFTER

Unit: mm (in)

Items	Standard
Valve lifter outer diameter	33.977 - 33.990 (1.3377 - 1.3382)
Valve lifter hole diameter	34.000 - 34.016 (1.3386 - 1.3392)
Valve lifter clearance	0.010 - 0.036 (0.0004 - 0.0014)

cardiagn.com

VALVE CLEARANCE

Unit: mm (in)

Items	Cold	Hot* (reference data)
Intake	0.26 - 0.34 (0.010 - 0.013)	0.304 - 0.416 (0.012 - 0.016)
Exhaust	0.29 - 0.37 (0.011 - 0.015)	0.308 - 0.432 (0.012 - 0.017)

*: Approximately 80°C (176°F)

AVAILABLE VALVE LIFTER

Unit: mm (in)

Identification mark A		Thickness B
Intake	Exhaust	

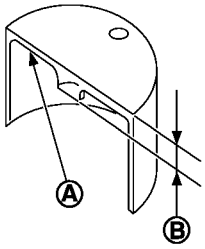

JPBIA0170ZZ

300N or 300n	300N or 300n or 300H	3.00 (0.1181)
302N or 302n	302N or 302n or 302H	3.02 (0.1189)
304N or 304n	304N or 304n or 304H	3.04 (0.1197)
306N or 306n	306N or 306n or 306H	3.06 (0.1205)
308N or 308n	308N or 308n or 308H	3.08 (0.1213)
310N or 310n	310N or 310n or 310H	3.10 (0.1220)
312N or 312n	312N or 312n or 312H	3.12 (0.1228)
314N or 314n	314N or 314n or 314H	3.14 (0.1236)
316N or 316n	316N or 316n or 316H	3.16 (0.1244)
318N or 318n	318N or 318n or 318H	3.18 (0.1252)
320N or 320n	320N or 320n or 320H	3.20 (0.1260)
322N or 322n	322N or 322n or 322H	3.22 (0.1268)
324N or 324n	324N or 324n or 324H	3.24 (0.1276)
326N or 326n	326N or 326n or 326H	3.26 (0.1283)
328N or 328n	328N or 328n or 328H	3.28 (0.1291)
330N or 330n	330N or 330n or 330H	3.30 (0.1299)
332N or 332n	332N or 332n or 332H	3.32 (0.1307)
334N or 334n	334N or 334n or 334H	3.34 (0.1315)
336N or 336n	336N or 336n or 336H	3.36 (0.1323)
338N or 338n	338N or 338n or 338H	3.38 (0.1331)
340N or 340n	340N or 340n or 340H	3.40 (0.1339)
342N or 342n	342N or 342n or 342H	3.42 (0.1346)
344N or 344n	344N or 344n or 344H	3.44 (0.1354)
346N or 346n	346N or 346n or 346H	3.46 (0.1362)
348N or 348n	348N or 348n or 348H	3.48 (0.1370)
350N or 350n	350N or 350n or 350H	3.50 (0.1378)

cardiagn.com

Cylinder Head

INFOID:0000000012409914

CYLINDER HEAD

Unit: mm (in)

Items	Standard	Limit
Head surface distortion	Less than 0.03 (0.0012)	0.1 (0.004)
Normal cylinder head height “H”	126.3 - 126.5 (4.97 - 4.98)	—

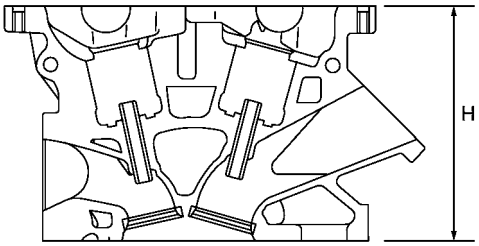

PBIC0924E

VALVE DIMENSIONS

Unit: mm (in)

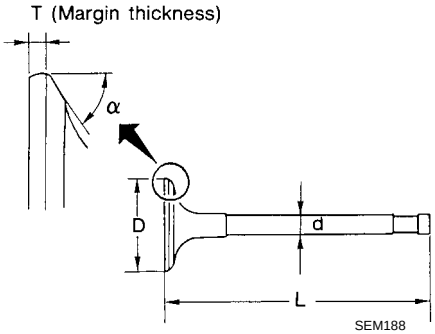

SEM188

Valve head diameter “D”	Intake	36.6 - 36.9 (1.441 - 1.453)
	Exhaust	30.2 - 30.5 (1.189 - 1.201)
Valve length “L”	Intake	102.01 (4.0161)
	Exhaust	99.56 (3.9197)
Valve stem diameter “d”	Intake	5.965 - 5.980 (0.2348 - 0.2354)
	Exhaust	5.955 - 5.970 (0.2345 - 0.2350)
Valve seat angle “α”	Intake	45°15′ - 45°45′
	Exhaust	
Valve margin “T”	Intake	1.1 (0.043)
	Exhaust	1.3 (0.051)
Valve margin “T” limit		0.5 (0.020)
Valve stem end surface grinding limit		0.2 (0.008)

VALVE GUIDE

cardiagn.com

Unit: mm (in)

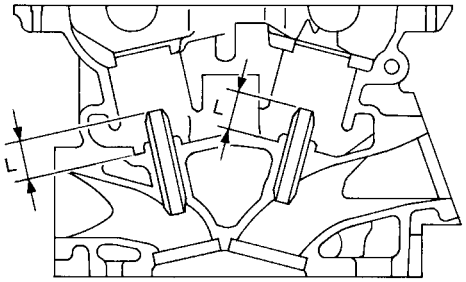

SEM950E

Items		Standard	Oversize (Service) [0.2 (0.008)]
Valve guide	Outer diameter	10.023 - 10.034 (0.3946 - 0.3950)	10.223 - 10.234 (0.4025 - 0.4029)
	Inner diameter (Finished size)	6.000 - 6.018 (0.2362 - 0.2369)	
Cylinder head valve guide hole diameter		9.975 - 9.996 (0.3927 - 0.3935)	10.175 - 10.196 (0.4006 - 0.4014)
Interference fit of valve guide		0.027 - 0.059 (0.0011 - 0.0023)	
Items		Standard	Limit
Valve guide clearance	Intake	0.020 - 0.053 (0.0008 - 0.0021)	0.08 (0.0031)
	Exhaust	0.030 - 0.056 (0.0012 - 0.0022)	0.09 (0.0035)
Projection length “L”		12.6 - 12.8 (0.496 - 0.504)	

VALVE SEAT

Unit: mm (in)

Items	Standard	Oversize (Service) [0.5 (0.02)]

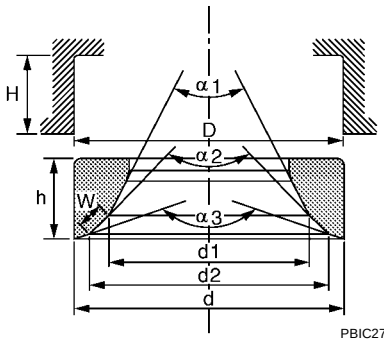

PBIC2745E

Cylinder head seat recess diameter “D”	Intake	38.000 - 38.016 (1.4961 - 1.4967)	38.500 - 38.516 (1.5157 - 1.5164)
	Exhaust	31.600 - 31.616 (1.2441 - 1.2447)	32.100 - 32.116 (1.2638 - 1.2644)
Valve seat outer diameter “d”	Intake	38.097 - 38.113 (1.4999 - 1.5005)	38.597 - 38.613 (1.5196 - 1.5202)
	Exhaust	31.680 - 31.696 (1.2472 - 1.2479)	32.180 - 32.196 (1.2669 - 1.2676)
Valve seat interference fit	Intake	0.081 - 0.113 (0.0032 - 0.0044)	
	Exhaust	0.064 - 0.096 (0.0025 - 0.0038)	
Diameter “d1”*1	Intake	34.6 (1.362)	
	Exhaust	27.7 (1.091)	
Diameter “d2”*2	Intake	35.9 - 36.4 (1.413 - 1.433)	
	Exhaust	29.3 - 29.8 (1.154 - 1.173)	
Angle “α1”	Intake	60°	
	Exhaust	60°	

cardiagn.com

Items		Standard	Oversize (Service) [0.5 (0.02)]
Angle “α2”	Intake	88°45′ - 90°15′	
	Exhaust	88°45′ - 90°15′	
Angle “α3”	Intake	120°	
	Exhaust	120°	
Contacting width “W”*3	Intake	1.0 - 1.4 (0.039 - 0.055)	
	Exhaust	1.2 - 1.6 (0.047 - 0.063)	
Height “h”	Intake	5.9 - 6.0 (0.232 - 0.236)	5.0 - 5.1 (0.197 - 0.201)
	Exhaust	5.9 - 6.0 (0.232 - 0.236)	4.9 - 5.0 (0.193 - 0.197)
Depth “H”		6.0 (0.236)	

*1: Diameter made by intersection point of conic angles “α1” and “α2”

*2: Diameter made by intersection point of conic angles “α2” and “α3”

*3: Machining data

VALVE SPRING

Items	Standard
Free height	48.51 mm (1.9100 in)
Installation height	38.66 mm (1.5220 in)
Installation load	166 - 188 N (16.9 - 19.2 kg, 37 - 42 lb)
Height during valve open	28.66 mm (1.1283 in)
Load with valve open	384 - 432 N (39.2 - 44.1 kg, 86 - 97 lb)

Unit: mm (in)

Items	Limit
Squareness	1.7 (0.067)

Cylinder Block

INFOID:0000000012409915

CYLINDER BLOCK

Unit: mm (in)

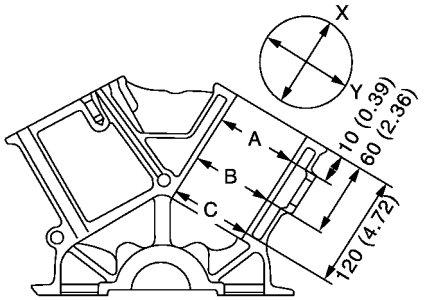

JPBIA2238GB

Surface flatness		Standard		Less than 0.03 (0.0012)
		Limit		0.1 (0.004)
Main bearing housing inner diameter		Standard		63.993 - 64.017 (2.5194 - 2.5203)
Cylinder bore	Inner diameter	Standard	Grade No. 1	95.500 - 95.510 (3.7598 - 3.7602)
			Grade No. 2	95.510 - 95.520 (3.7602 - 3.7606)
			Grade No. 3	95.520 - 95.530 (3.7606 - 3.7610)
		Wear limit		0.2 (0.008)

cardiagn.com

Out-of-round	Limit		0.015 (0.0006)
Taper			0.010 (0.0004)
Main bearing housing inner diameter grade (Without bearing)		Grade No. A	63.993 - 63.994 (2.5194 - 2.5194)
		Grade No. B	63.994 - 63.995 (2.5194 - 2.5195)
		Grade No. C	63.995 - 63.996 (2.5195 - 2.5195)
		Grade No. D	63.996 - 63.997 (2.5195 - 2.5196)
		Grade No. E	63.997 - 63.998 (2.5196 - 2.5196)
		Grade No. F	63.998 - 63.999 (2.5196 - 2.5196)
		Grade No. G	63.999 - 64.000 (2.5196 - 2.5197)
		Grade No. H	64.000 - 64.001 (2.5197 - 2.5197)
		Grade No. J	64.001 - 64.002 (2.5197 - 2.5198)
		Grade No. K	64.002 - 64.003 (2.5198 - 2.5198)
		Grade No. L	64.003 - 64.004 (2.5198 - 2.5198)
		Grade No. M	64.004 - 64.005 (2.5198 - 2.5199)
		Grade No. N	64.005 - 64.006 (2.5199 - 2.5199)
		Grade No. P	64.006 - 64.007 (2.5199 - 2.5200)
		Grade No. R	64.007 - 64.008 (2.5200 - 2.5200)
		Grade No. S	64.008 - 64.009 (2.5200 - 2.5200)
		Grade No. T	64.009 - 64.010 (2.5200 - 2.5201)
		Grade No. U	64.010 - 64.011 (2.5201 - 2.5201)
		Grade No. V	64.011 - 64.012 (2.5201 - 2.5202)
		Grade No. W	64.012 - 64.013 (2.5202 - 2.5202)
		Grade No. X	64.013 - 64.014 (2.5202 - 2.5202)
		Grade No. Y	64.014 - 64.015 (2.5202 - 2.5203)
		Grade No. 4	64.015 - 64.016 (2.5203 - 2.5203)
		Grade No. 7	64.016 - 64.017 (2.5203 - 2.5203)
Difference in inner diameter between cylinders	Standard		Less than 0.03 (0.0012)

AVAILABLE PISTON

Unit: mm (in)

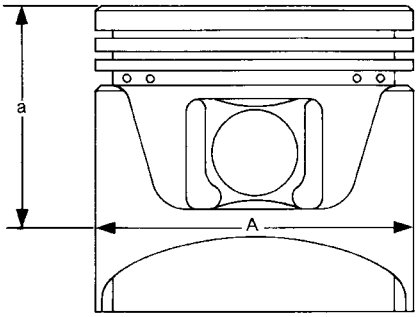

SEM882E

Items		Standard	Oversize (Service) [0.2 (0.008)]
Piston skirt diameter “A”	Grade No. 1	95.480 - 95.490 (3.7590 - 3.7594)	—
	Grade No. 2	95.490 - 95.500 (3.7594 - 3.7598)	—
	Grade No. 3	95.500 - 95.510 (3.7598 - 3.7602)	—
	Service	—	95.680 - 95.710 (3.7669 - 3.7681)
Items		Standard	Limit
“a” dimension		38.0 (1.496)	—
Piston pin hole diameter	Grade No. 0	21.993 - 21.999 (0.8659 - 0.8661)	—
	Grade No. 1	21.999 - 22.005 (0.8661 - 0.8663)	—
Piston to cylinder bore clearance		0.010 - 0.030 (0.0004 - 0.0012)	0.08 (0.0031)

PISTON RING

Unit: mm (in)

Items	Standard	Limit

cardiagn.com

Side clearance	Top	0.045 - 0.080 (0.0018 - 0.0031)	0.11 (0.0043)
	2nd	0.030 - 0.070 (0.0012 - 0.0028)	0.10 (0.0039)
	Oil ring	0.045 - 0.125 (0.0018 - 0.0049)	—
End gap	Top	0.23 - 0.28 (0.0091 - 0.0110)	0.50 (0.0197)
	2nd	0.33 - 0.43 (0.0130 - 0.0169)	0.62 (0.0244)
	Oil (rail ring)	0.20 - 0.45 (0.0079 - 0.0177)	0.80 (0.0315)

PISTON PIN

Unit: mm (in)

Items		Standard	Limit
Piston pin outer diameter	Grade No. 0	21.989 - 21.995 (0.8657 - 0.8659)	—
	Grade No. 1	21.995 - 22.001 (0.8659 - 0.8662)	—
Piston to piston pin oil clearance		0.002 - 0.006 (0.0001 - 0.0002)	—
Connecting rod bushing oil clearance		0.005 - 0.017 (0.0002 - 0.0007)	0.030 (0.0012)

CONNECTING ROD

Unit: mm (in)

Items		Standard	Limit
Center distance		144.15 - 144.25 (5.68 - 5.68)	—
Bend [per 100 (3.94)]		—	0.15 (0.0059)
Torsion [per 100 (3.94)]		—	0.30 (0.0118)
Connecting rod bushing inner diameter*	Grade No. 0	22.000 - 22.006 (0.8661 - 0.8664)	—
	Grade No. 1	22.006 - 22.012 (0.8664 - 0.8666)	—
Connecting rod big end diameter (Without bearing)		55.000 - 55.013 (2.1654 - 2.1659)	—
Side clearance		0.20 - 0.35 (0.0079 - 0.0138)	0.40 (0.0157)

*: After installing in connecting rod

CRANKSHAFT

cardiagn.com

Unit: mm (in)

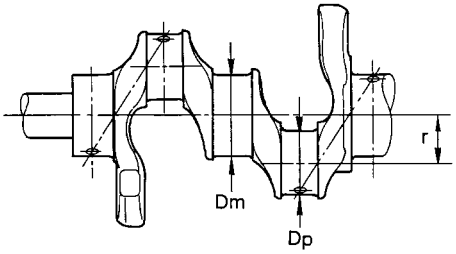

SEM645

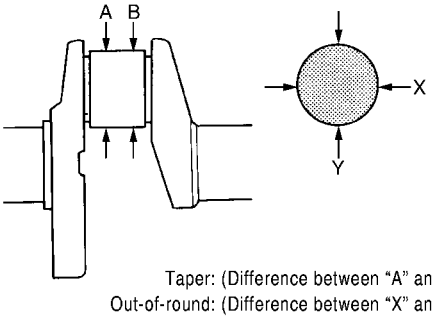

SBIA0535E

Main journal diameter. “Dm” grade	Standard	Grade No. A	59.975 - 59.974 (2.3612 - 2.3612)
		Grade No. B	59.974 - 59.973 (2.3612 - 2.3611)
		Grade No. C	59.973 - 59.972 (2.3611 - 2.3611)
		Grade No. D	59.972 - 59.971 (2.3611 - 2.3611)
		Grade No. E	59.971 - 59.970 (2.3611 - 2.3610)
		Grade No. F	59.970 - 59.969 (2.3610 - 2.3610)
		Grade No. G	59.969 - 59.968 (2.3610 - 2.3609)
		Grade No. H	59.968 - 59.967 (2.3609 - 2.3609)
		Grade No. J	59.967 - 59.966 (2.3609 - 2.3609)
		Grade No. K	59.966 - 59.965 (2.3609 - 2.3608)
		Grade No. L	59.965 - 59.964 (2.3608 - 2.3608)
		Grade No. M	59.964 - 59.963 (2.3608 - 2.3607)
		Grade No. N	59.963 - 59.962 (2.3607 - 2.3607)
		Grade No. P	59.962 - 59.961 (2.3607 - 2.3607)
		Grade No. R	59.961 - 59.960 (2.3607 - 2.3606)
		Grade No. S	59.960 - 59.959 (2.3606 - 2.3606)
		Grade No. T	59.959 - 59.958 (2.3606 - 2.3605)
		Grade No. U	59.958 - 59.957 (2.3605 - 2.3605)
		Grade No. V	59.957 - 59.956 (2.3605 - 2.3605)
		Grade No. W	59.956 - 59.955 (2.3605 - 2.3604)
		Grade No. X	59.955 - 59.954 (2.3604 - 2.3604)
		Grade No. Y	59.954 - 59.953 (2.3604 - 2.3603)
		Grade No. 4	59.953 - 59.952 (2.3603 - 2.3603)
		Grade No. 7	59.952 - 59.951 (2.3603 - 2.3603)
Pin journal diameter. “Dp” grade	Standard	Grade No. 0	51.968 - 51.974 (2.0460 - 2.0462)
		Grade No. 1	51.962 - 51.968 (2.0457 - 2.0460)
		Grade No. 2	51.956 - 51.962 (2.0445 - 2.0457)
Center distance “r”			40.66 - 40.74 (1.6008 - 1.6039)
Taper (Difference between “A” and “B”)	Limit		0.002 (0.0001)
Out-of-round (Difference between “X” and “Y”)			0.002 (0.0001)
Crankshaft runout [TIR*]	Standard		Less than 0.05 (0.0020)
	Limit		0.10 (0.0039)
Crankshaft end play	Standard		0.10 - 0.25 (0.0039 - 0.0098)
	Limit		0.30 (0.0118)

*: Total indicator reading

Main Bearing

INFOID:0000000012409916

MAIN BEARING

cardiagn.com

Unit: mm (in)

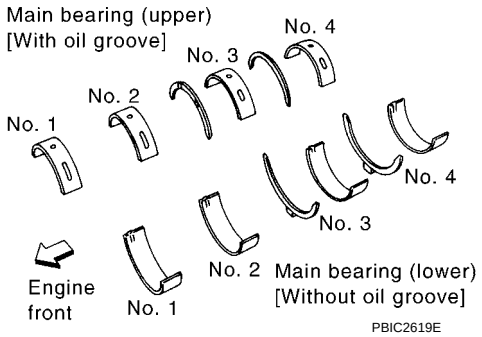

Grade number		Thickness	Width	Identification color	Remarks
0		2.000 - 2.003 (0.0787 - 0.0789)	19.9 - 20.1 (0.783 - 0.791)	Black	Grade is the same for upper and lower bearings.
1		2.003 - 2.006 (0.0789 - 0.0790)		Brown	
2		2.006 - 2.009 (0.0790 - 0.0791)		Green	
3		2.009 - 2.012 (0.0791 - 0.0792)		Yellow	
4		2.012 - 2.015 (0.0792 - 0.0793)		Blue	
5		2.015 - 2.018 (0.0793 - 0.0794)		Pink	
6		2.018 - 2.021 (0.0794 - 0.0796)		Purple	
7		2.021 - 2.024 (0.0796 - 0.0797)		White	
01	UPR	2.003 - 2.006 (0.0789 - 0.0790)		Brown	Grade and color are different for upper and lower bearings.
	LWR	2.000 - 2.003 (0.0787 - 0.0789)		Black	
12	UPR	2.006 - 2.009 (0.0790 - 0.0791)		Green	
	LWR	2.003 - 2.006 (0.0789 - 0.0790)		Brown	
23	UPR	2.009 - 2.012 (0.0791 - 0.0792)		Yellow	
	LWR	2.006 - 2.009 (0.0790 - 0.0791)		Green	
34	UPR	2.012 - 2.015 (0.0792 - 0.0793)		Blue	
	LWR	2.009 - 2.012 (0.0791 - 0.0792)		Yellow	
45	UPR	2.015 - 2.018 (0.0793 - 0.0794)		Pink	
	LWR	2.012 - 2.015 (0.0792 - 0.0793)		Blue	
56	UPR	2.018 - 2.021 (0.0794 - 0.0796)		Purple	
	LWR	2.015 - 2.018 (0.0793 - 0.0794)		Pink	
67	UPR	2.021 - 2.024 (0.0796 - 0.0797)		White	
	LWR	2.018 - 2.021 (0.0794 - 0.0796)		Purple	

UNDERSIZE

Unit: mm (in)

Items	Thickness	Main journal diameter
0.25 (0.0098)	2.132 - 2.140 (0.0839 - 0.0843)	Grind so that bearing clearance is the specified value.

MAIN BEARING OIL CLEARANCE

Unit: mm (in)

Items	Standard	Limit
Main bearing oil clearance	0.035 - 0.045 (0.0014 - 0.0018)*	0.065 (0.0026)

*: Actual clearance

Connecting Rod Bearing

INFOID:0000000012409917

CONNECTING ROD BEARING

cardiagn.com

Unit: mm (in)

Grade number	Thickness	Identification color (mark)
0	1.500 - 1.503 (0.0591 - 0.0592)	Black
1	1.503 - 1.506 (0.0592 - 0.0593)	Brown
2	1.506 - 1.509 (0.0593 - 0.0594)	Green

UNDERSIZE

Unit: mm (in)

Items	Thickness	Crank pin journal diameter
0.25 (0.0098)	1.626 - 1.634 (0.0640 - 0.0643)	Grind so that bearing clearance is the specified value.

CONNECTING ROD BEARING OIL CLEARANCE

Unit: mm (in)

Items	Standard	Limit
Connecting rod bearing oil clearance	0.020 - 0.045 (0.0008 - 0.0018)*	0.070 (0.0028)

*: Actual clearance

cardiagn.com